PENTWATER HARBOR, MICHIGAN

NORTH PIER AND REVETMENT REPAIR OF

~~EXISTING~~ SECTIONS A, B, C, D, E, F & F-1
PRE-CONS

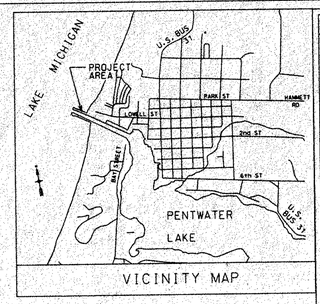

VICINITY MAP

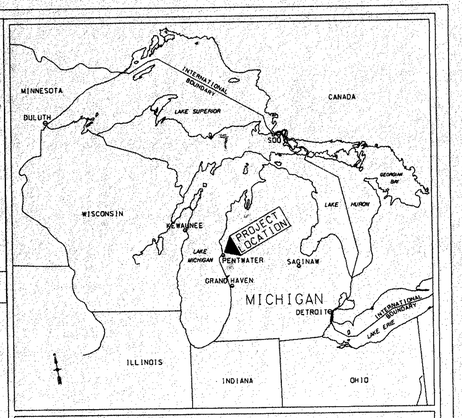

US Army Corps of Engineers Detroit District

LOCATION MAP

SCALE OF MILES

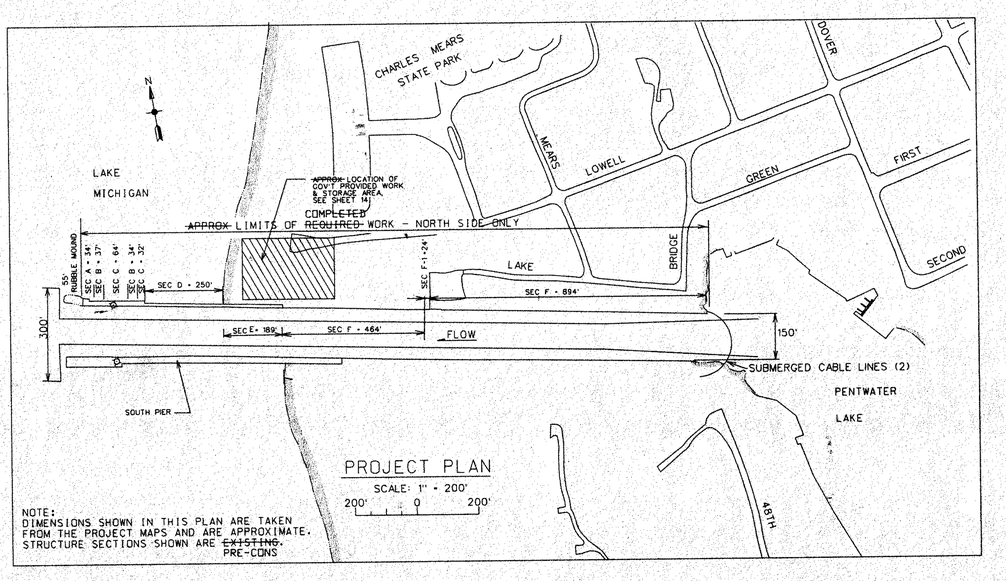

PROJECT PLAN

SCALE: 1" = 200'

200' 0 200'

NOTE:
DIMENSIONS SHOWN IN THIS PLAN ARE TAKEN FROM THE PROJECT MAPS AND ARE APPROXIMATE.
STRUCTURE SECTIONS SHOWN ARE ~~EXISTING~~ PRE-CONS.

GENERAL NOTES (APPLICABLE TO ALL SHEETS)

1. ALL SOUNDINGS, BENCH MARKS AND ELEVATIONS ~~ARE~~ WERE REFERED TO LOW WATER DATUM (576.8 FEET ABOVE MEAN WATER LEVEL AT FATHER POINT, QUEBEC CANADA, I.G.L.D. 1955).
2. ALL ITEMS SHOWN ARE ~~EXISTING~~ PRE-CONS UNLESS OTHERWISE INDICATED AS ~~REQ'D.~~ PRE-CONS.
3. ALL STATIONING ~~IS~~ WAS MEASURED ALONG THE ESTABLISHED CONSTRUCTION BASE LINE.
4. THE CONTRACTOR ~~SHALL~~ LOCATED ALL ACTIVE UNDERGROUND UTILITIES PRIOR TO STARTING WORK AND ~~SHALL~~ CONDUCTED HIS OPERATIONS IN SUCH A MANNER AS TO ENSURE THAT THOSE UTILITIES NOT REQUIRING RELOCATION ~~WILL~~ WERE NOT ~~BE~~ DISTURBED.
5. PIER SECTIONS A,B,C,D, & E ~~SHALL NOT BE~~ WERE NOT SUBJECTED ~~OF~~ TO ANY LOADING GREATER THAN 300 PSF ANYTIME DURING CONSTRUCTION. REVETMENT SECTIONS F-1 & F ~~SHALL NOT BE~~ WERE NOT SUBJECTED TO ANY LOADING GREATER THAN 150 PSF ANYTIME DURING CONSTRUCTION.
6. THE ~~EXISTING~~ PRE-CONS INFORMATION DEPICTED ON THESE DRAWINGS REPRESENTS THE RESULTS OF SURVEYS MADE ON THE DATES INDICATED AND CAN ONLY BE CONSIDERED AS INDICATING THE GENERAL CONDITIONS EXISTING AT THAT TIME.
   SURVEY BY GOSLING CZUBAK
   DATE OF SURVEY: DECEMBER 19 AND 20, 1994
   APRIL 6,7 & 8, 1995 AND MAY 5, 1995
7. PRIOR TO START OF CONSTRUCTION, THE CONTRACTOR ~~WILL~~ CONDUCTED CHECK SURVEYS ON EACH ASPECT OF THE WORK AS PROVIDED FOR IN THE SPECIFICATIONS. ~~THE RESULTS OF THE CHECK SURVEYS MIGHT AFFECT THE QUANTITIES AND ALL CHANGES MUST BE APPROVED BY THE CONTRACTING OFFICERS' REPRESENTATIVE PRIOR TO START UP.~~
8. ELEVATIONS ABOVE LWD ARE SHOWN AS +5.00 OR +5.00R. SOUNDINGS BELOW LWD ARE SHOWN AS 5.00 OR 5.00R. 'R' INDICATES THE SOUNDING OR ELEVATION AT ROCK.
9. ALL SOUNDINGS WERE PERFORMED USING A 12" DIA. METAL BASKET.
10. ~~REQ'D~~ WORK CONSISTED OF, BUT ~~IS~~ WAS NOT LIMITED TO THE PLACEMENT OF SSP WALLS & WALL SUPPORT HARDWARE, PLACEMENT OF NEW REINFORCED CONCRETE CAP AND WALKWAY, PLACEMENT OF RUBBLE MOUND WAVE ATTENUATION STRUCTURE, REMOVAL OF 200 LF OF EXISTING PIER STRUCTURE, REMOVAL OF EXISTING CONCRETE, PLACEMENT OF GUARDRAILS & EGRESS LADDERS AND ~~REQ'D~~ RELOCATION OF EXISTING STONE AS DIRECTED BY ONSITE GOVERNMENT REPRESENTATIVE.
11. SEE SHEET 13 FOR SOIL BORING LOGS. SEE SHEETS 2 & 3 FOR SOIL BORING LOCATIONS.
12. LIMITS OF ~~REQ'D~~ WORK ~~ARE~~ WERE ON THE NORTH SIDE OF THE HARBOR FROM STA 8+89.5 TO STA 29+20 AS SHOWN ON SHEETS 5,6, & 7. ~~EXISTING~~ PRE-CONS AND ~~PROPOSED~~ INSTALLED SECTION IDENTIFICATION AND THEIR RESPECTIVE STATIONING IS AS FOLLOWS:

	STATIONING	
	~~EXISTING~~ PRE-CONS	~~PROPOSED~~ INSTALLED
SECTION A	8+92.5 TO 9+26	8+89.5 TO 9+29
SECTION B/C	9+26 TO 10+93	SEE SEC B
SECTION B	NEW DESIGNATION FROM ~~EXIST~~ PRE-CONS SEC B/C	9+29 TO 10+96
SECTION C	NEW DESIGNATION FROM ~~EXIST~~ PRE-CONS SEC D	10+26 TO 12+19.5
SECTION D	10+93 TO 13+41.5	12+19.5 TO 14+13.5
SECTION E	13+41.5 TO 15+31	14+13.5 TO 15+31
SECTION F	15+31 TO 20+03 AND 20+27 TO 29+16.5	SEE FA, FB-1 & FB-2
SECTION F-1	20+03 TO 20+27	SEE SECTION FA
SECTION FA (EARTH ANCHOR RETAINMENT)		15+31 TO 27+62
SECTION FB-1 (SSP RETAINMENT & 10' CONCRETE WALK)		27+62 TO 28+79
SECTION FB-2 (SSP RETAINMENT & 24' CONCRETE WALK)		28+79 TO 29+19.5

DRAWING INDEX

SHT. NO.	DRAWING TITLE
1	LOCATION MAP, VICINITY MAP, PROJECT PLAN & DRAWING INDEX
2	~~EXISTING~~ PRE-CONS CONDITIONS PLAN- STA 8+00 TO STA 17+00
3	~~EXISTING~~ PRE-CONS CONDITIONS PLAN- STA 17+00 TO STA 30+00
4	~~EXISTING~~ PRE-CONS STRUCTURE CROSS SECTIONS
5	STRUCTURE PLAN - STA 8+39 TO STA 15+31
6	STRUCTURE PLAN - STA 15+31 TO STA 22+50
7	STRUCTURE PLAN - STA 22+50 TO STA 29+19.5
8	REPAIRED SECTIONS
9	CONCRETE CAP & WALKWAY DETAILS
10	STEEL SECTIONS AND DETAILS
11	MISCELLANEOUS CONCRETE AND STEEL DETAILS
12	EARTH ANCHOR AND LADDER DETAILS
13	SOIL BORING LOGS
14	REAL ESTATE EASEMENTS

ABBREVIATIONS

APPROXIMATE	APPROX
AVENUE	AVE
SURVEY BASE LINE	ℬ OR BL
CENTER LINE	℄ OR CL
CENTER TO CENTER	C/C
CONCRETE	CONC
DIAMETER	DIA. ⌀
EAST	E
ELEVATION	EL. ELEV
EXISTING	(E) OR EXIST
FOOT	' OR FT
INCH	" OR IN
INSTALLED	INS
INTERNATIONAL GREAT LAKES DATUM	I.G.L.D.
LOW WATER DATUM	LWD
MINIMUM	MIN
NORTH	N
NUMBER	NO
ON CENTER	O/C
OPPOSITE	OPP
OUTSIDE DIAMETER	OD
PLATE	PL OR ℙ
POUNDS	LBS
POUNDS PER SQUARE FOOT	PSF
PRE-CONSTRUCTION	PRE-CONS
REINFORCED	REINF
ROCK	R
REQUIRED	REQ'D
SIMILAR	SIM
SOUTH	S
SPACES	SPA
STATION	STA
STEEL	STL
STEEL SHEET PILE	SSP
STREET	ST
STRUCTURE	STRUCT
TYPICAL	TYP
UNITED STATES COAST GUARD	U.S.C.G.
UNIFIED SOIL CLASSIFICATION SYSTEM	U.S.C.S.
UNITED STATES	U.S.
WEIGHT	WT
WEST	W

LEGEND (ALL SHEETS)

- SOIL BORING LOCATION
- NAVIGATION LIGHT
- HORIZONTAL CONTROL POINT
- VERTICAL CONTROL POINT
- SHORE LINE
- 8 — INDICATES APPROXIMATE DEPTHS AND LOCATIONS OF LAKE AND HARBOR BOTTOM.
- CONSTRUCTION CENTER LINE
- SURVEY BASE LINE
- WORK AND TEMPORARY STORAGE AREA
- CHANNEL LINE
- TREE - LINE
- POWER - LIGHT POLE
- SUBMERGED CABLE LINE
- ~~EXISTING~~ PRE-CONS STONE
- INSPECTION HOLE
- BOLLARDS

REFERENCE CONVENTIONS

(TYPICAL ALL SHEETS)

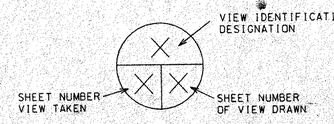

Value Engineering

Increase Profit...Submit VECP'S

THIS PROJECT WAS DESIGNED BY THE DETROIT DISTRICT OF THE U.S. ARMY CORPS OF ENGINEERS. THE INITIALS OR SIGNATURES AND REGISTRATION DESIGNATIONS OF INDIVIDUALS APPEAR ON THESE PROJECT DOCUMENTS WITHIN THE SCOPE OF THEIR EMPLOYMENT AS REQUIRED BY ER 1110-1-8152.

NO.	DATE	REVISION	BY

U.S. ARMY ENGINEER DISTRICT, DETROIT
CORPS OF ENGINEERS
DETROIT, MICHIGAN

SIGNATURES AFFIXED BELOW INDICATE OFFICIAL RECOMMENDATION AND APPROVAL OF ALL DRAWINGS IN THIS SET AS INDEXED ON THIS SHEET.

PENTWATER HARBOR MICHIGAN
NORTH PIER AND REVETMENT REPAIRED
LOCATION MAP, VICINITY MAP, PROJECT PLAN & DRAWING INDEX

SUBMITTED BY: _____ P.E.
CHIEF, DESIGN BRANCH

APPROVED: _____ P.E.
CHIEF, ENGINEERING & PLANNING DIVISION

SCALE: AS SHOWN
PLOT SCALE: 1"= 100'
APRIL 1999
CADD FILE NAME: PWL01A99.DGN
DRAWING NUMBER
SHEET 1 OF 14

SOLICITATION NUMBER: DACW35-99-B-0017

$$$queue$$$

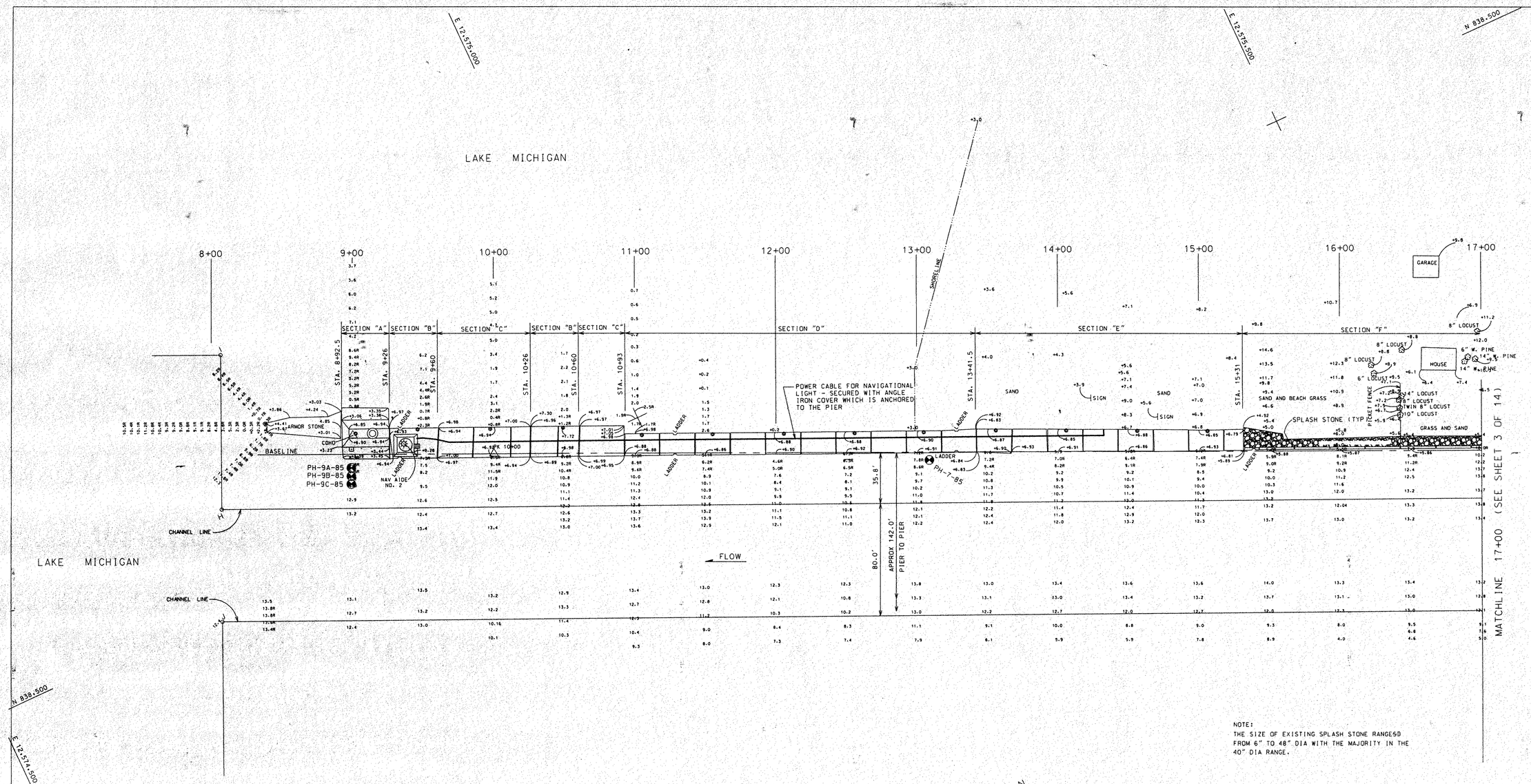

NOTE:
THE SIZE OF EXISTING SPLASH STONE RANGES0 FROM 6" TO 48" DIA WITH THE MAJORITY IN THE 40" DIA RANGE.

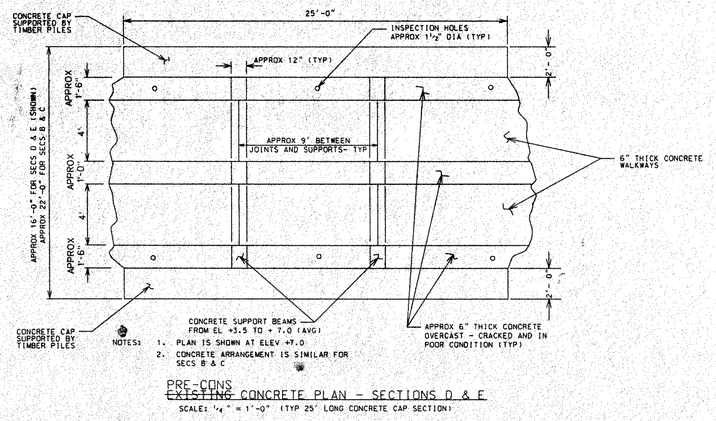

NOTES:
1. PLAN IS SHOWN AT ELEV +7.0
2. CONCRETE ARRANGEMENT IS SIMILAR FOR SECS B & C

PRE-CONS
~~EXISTING~~ CONCRETE PLAN - SECTIONS D & E
SCALE: ¼" = 1'-0" (TYP 25' LONG CONCRETE CAP SECTION)

PRE-CONS
~~EXISTING~~ CONDITIONS PLAN
(STA 8+00 TO STA 17+00)

30' 0 30' 60' 90'
scale feet

SCALE: 1" = 30'

N

HORIZONTAL CONTROL			
STATION NUMBER	COORDINATES NORTH	EAST	DESCRIPTION
COHO	838,573.8770	12,574,811.8160	HOLE IN CONCRETE

NORTH BASELINE CONTROL			
STATION NUMBER	COORDINATES NORTH	EAST	DESCRIPTION
PK 10+00	838,519.8231	12,574,897.0442	PK NAIL- IN CONCRETE

NOTE:
"THE OLD WOODEN PIER STRUCTURE MAY BE ENCOUNTERED AT THE NORTH PIERHEAD DURING EXCAVATION OF PRE-CONSTRUCTION ARMOR STONE AND DURRING PILE DRIVING OPERATIONS."

NO.	DATE	REVISION	BY

U.S. ARMY ENGINEER DISTRICT, DETROIT
CORPS OF ENGINEERS
DETROIT, MICHIGAN

DESIGNED BY: AW
DRAWN BY: DG/AW
CHECKED BY: AW
REVIEWED BY:
CHIEF, CIVIL DESIGN SECTION P.E.

PENTWATER HARBOR MICHIGAN
NORTH PIER AND REVETMENT REPAIRED
PRE-CONS ~~EXISTING~~ CONDITIONS PLAN - STA 8+00 TO STA 17+00

SCALE: AS SHOWN
PLOT SCALE: 1" = 30'
APRIL 1999
CADD FILE NAME: PWT02A99.DGN
DRAWING NUMBER
SHEET 2 OF 14

SOLICITATION NUMBER: DACW35-99-B-0017

$$$aqueous$$$

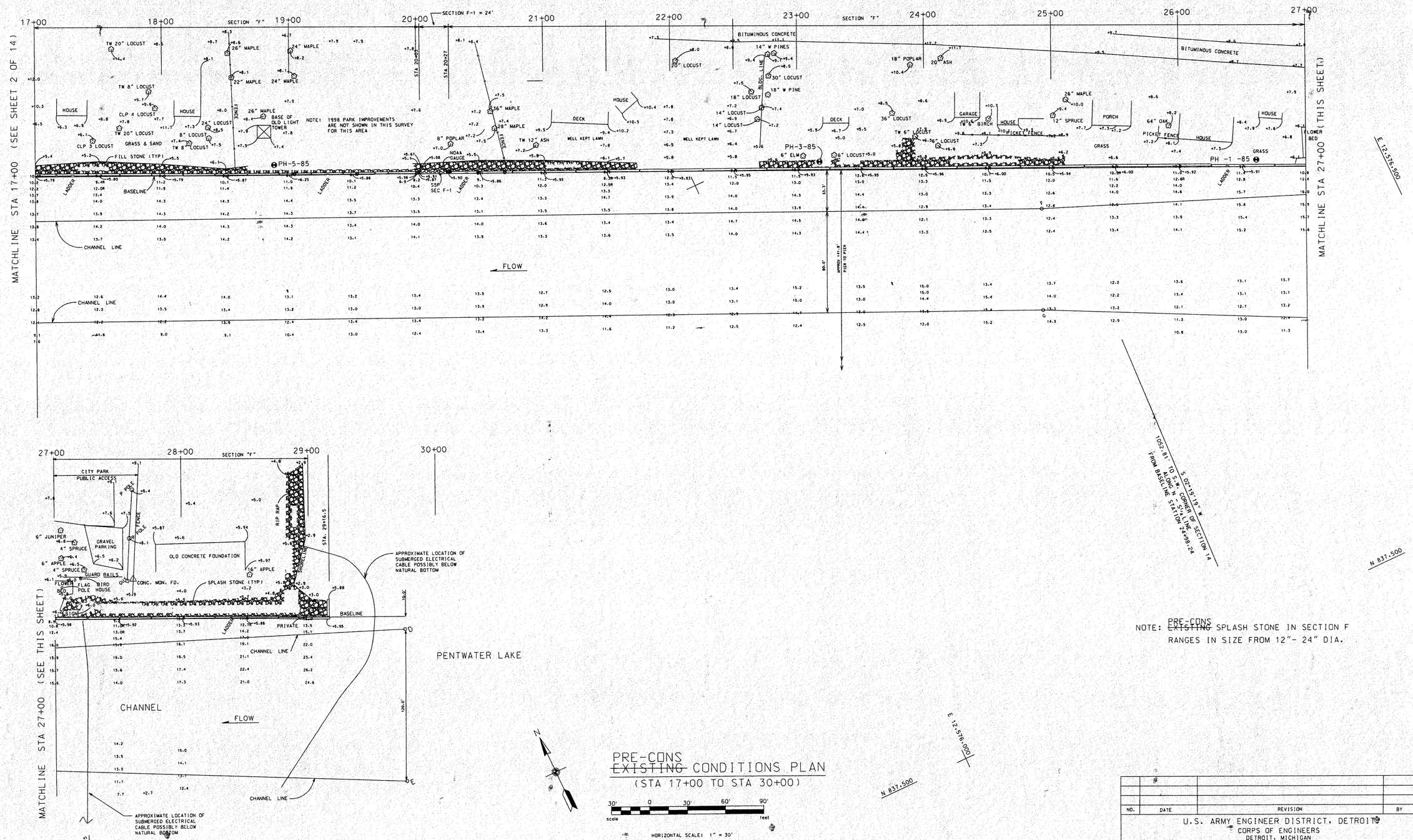

NOTE: PRE-CONS ~~EXISTING~~ SPLASH STONE IN SECTION F RANGES IN SIZE FROM 12"- 24" DIA.

NO.	DATE	REVISION	BY

U.S. ARMY ENGINEER DISTRICT, DETROIT
CORPS OF ENGINEERS
DETROIT, MICHIGAN

DESIGNED BY: AW	PENTWATER HARBOR MICHIGAN
DRAWN BY: AW	NORTH PIER AND REVETMENT REPAIRED
CHECKED BY: EB	PRE-CONS ~~EXISTING~~ CONDITIONS PLAN STA 17+00 TO STA 30+00
REVIEWED BY:	SCALE: AS SHOWN PLOT SCALE: 1" = 30' — APRIL 1999
CHIEF, CIVIL DESIGN SECTION P.E.	CADD FILE NAME: PWT03A99.DGN
	SHEET 3 OF 14 — DRAWING NUMBER

SOLICITATION NUMBER: DACW35-99-B-0017

$$$queue$$$

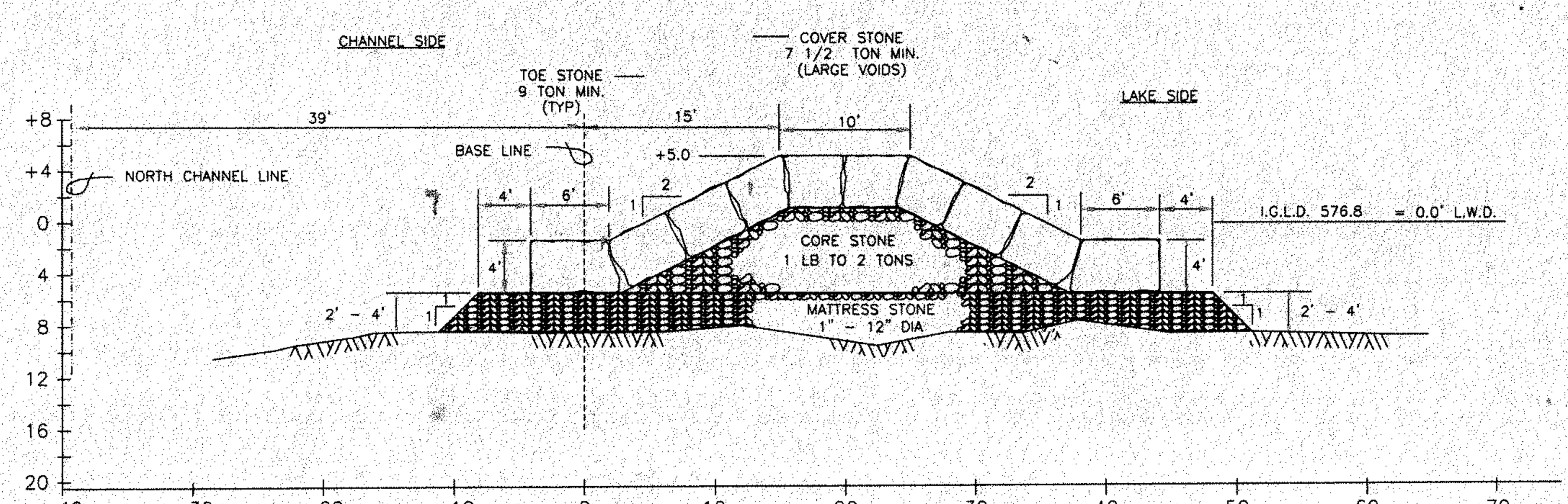

STATION 8+50 NORTH PIER
RUBBLE MOUND - LOOKING WEST

AS BUILT 1959

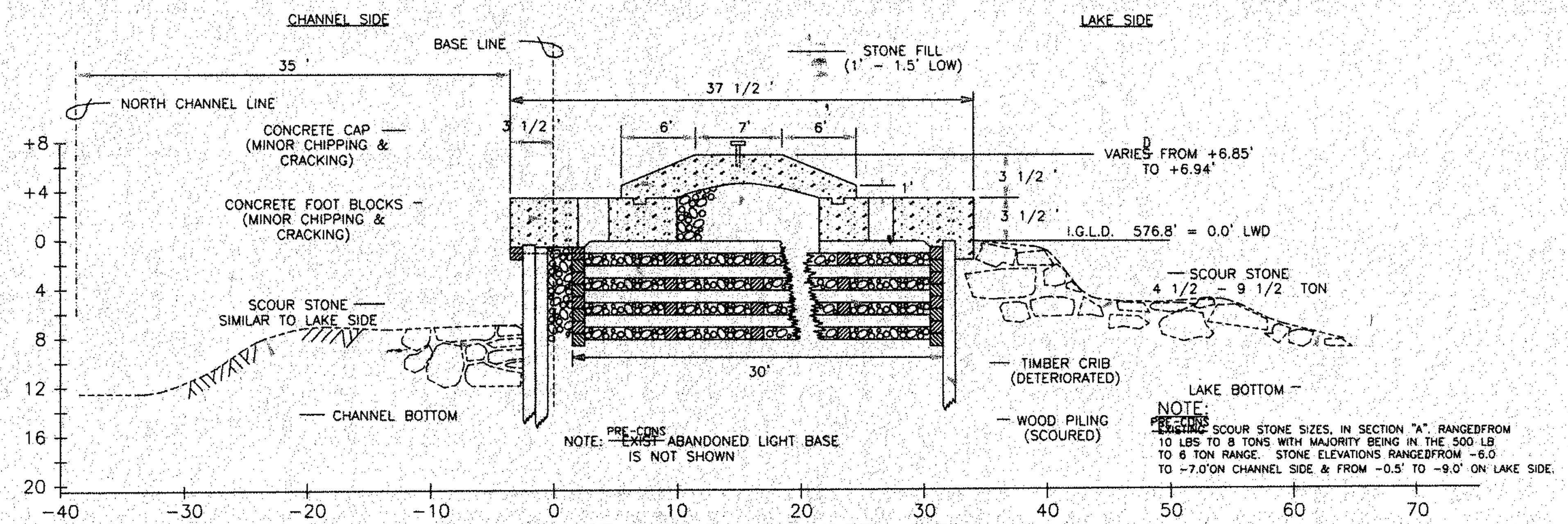

STATION 9+00 NORTH PIER
SECTION A LOOKING WEST

BUILT : SUBSTRUCTURE 1872 ,1899
SUPERSTRUCTURE 1938

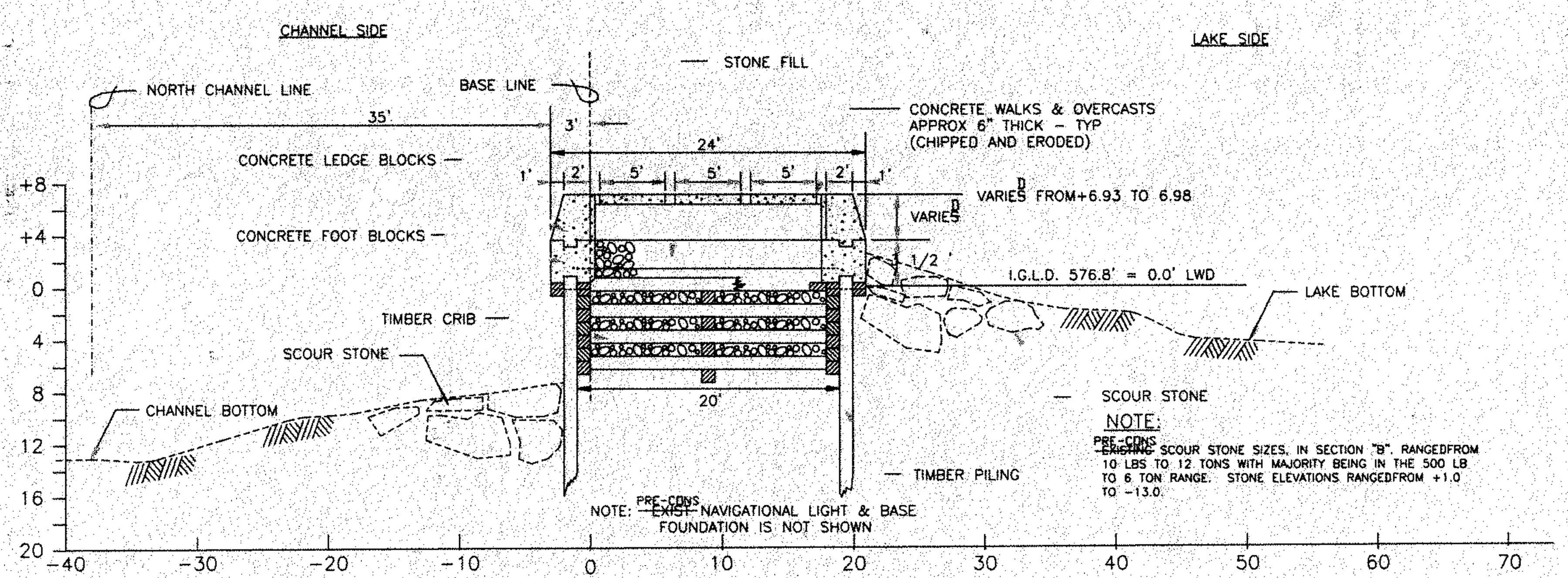

STATION 9+50 NORTH PIER
SECTION "B" - LOOKING WEST
BUILT 1938

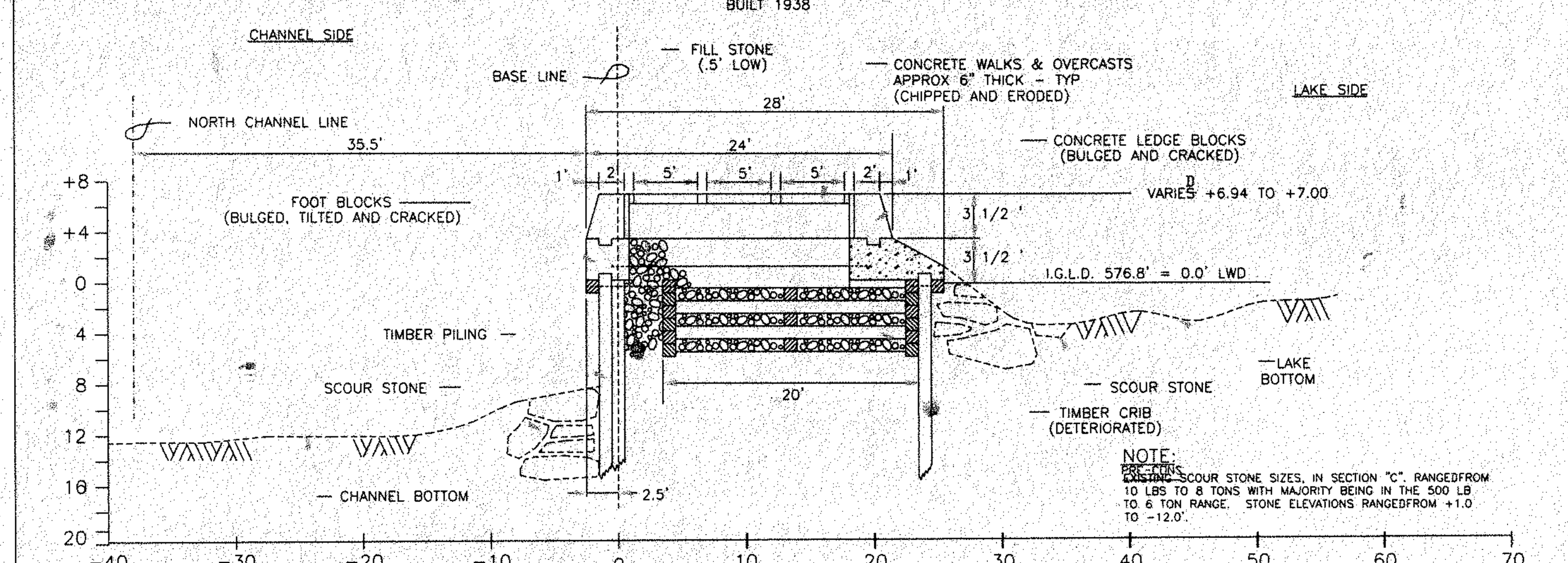

STATION 10+00 NORTH PIER
SECTION "C" - LOOKING WEST

BUILT 1938

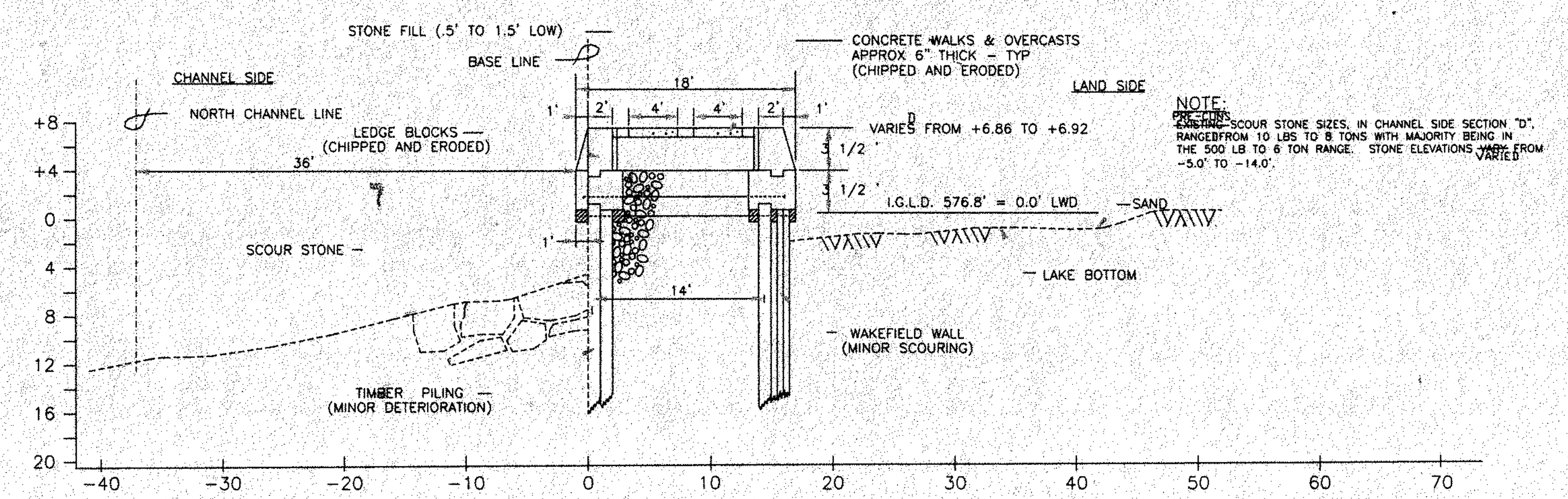

STATION 11+50 NORTH PIER
SECTION "D" - LOOKING WEST

BUILT 1938

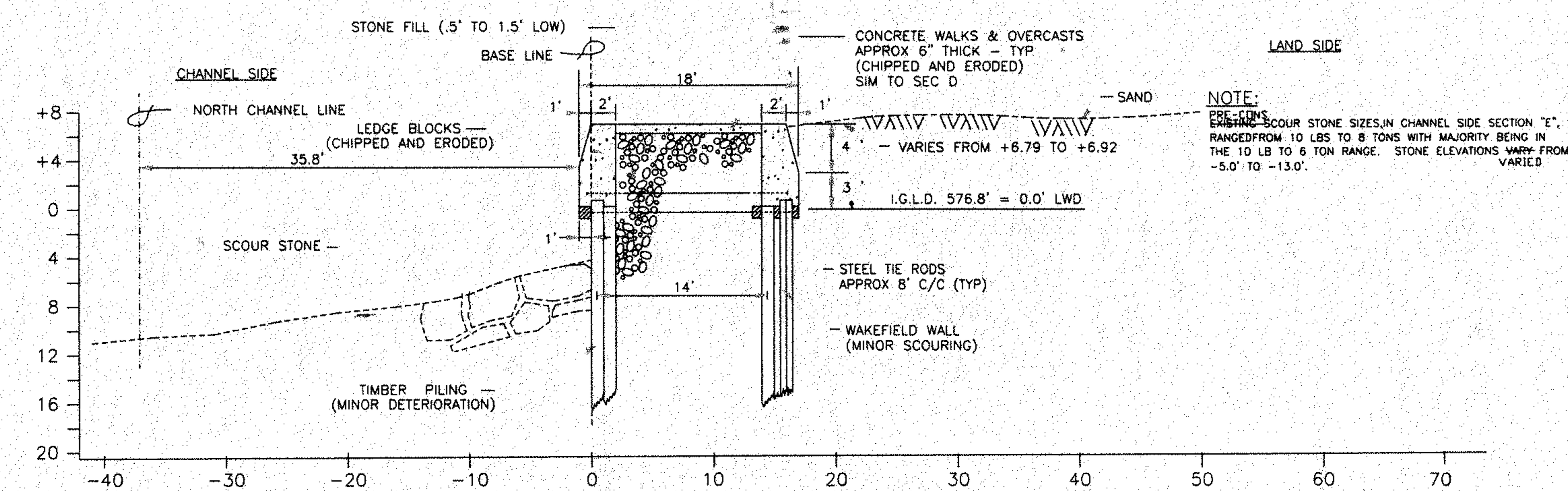

STATION 15+00 NORTH PIER
SECTION "E" - LOOKING WEST

BUILT 1938

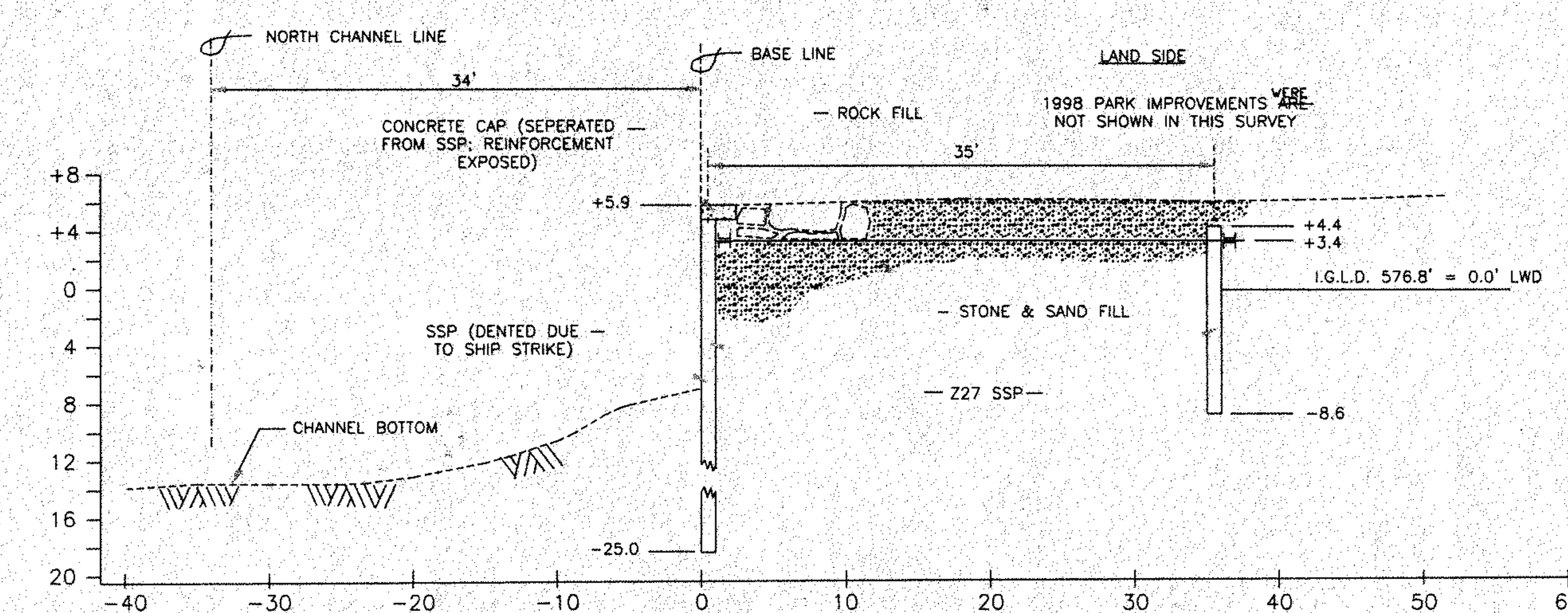

STATION 20+20 NORTH REVETMENT
SECTION "F-1" - LOOKING WEST

BUILT 1973

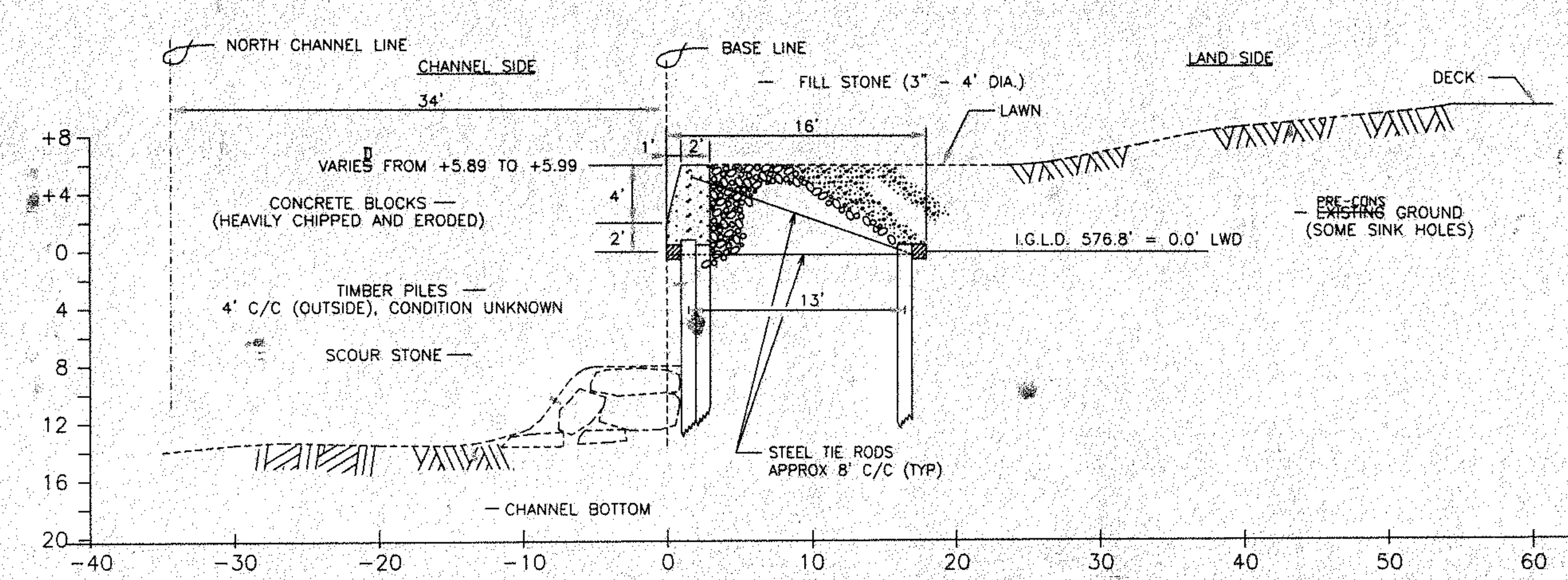

STATION 21+50 NORTH REVETMENT
SECTION "F" - LOOKING WEST

BUILT 1939
NOTE : THE SUBSTRUCTURE WAS ~~IS~~ HEAVILY COVERED WITH ZEBRA MUSSELS

LEGEND

- CHANNEL LIMITS
- SURVEY BASELINE
- CONCRETE
- SAND
- STONE FILL SIZE AS INDICATED
- SCOUR STONE

NOTES

1. ALL ITEMS SHOWN ARE PRE-CONS ~~EXISTING~~ AND REPRESENTED THE GENERAL CONDITIONS OF THE STRUCTURE.
2. ELEVATIONS AND DEPTHS WERE ~~ARE~~ REFERRED TO LOW WATER DATUM (L.W.D.) FOR LAKE MICHIGAN WHICH WAS ~~IS~~ 576.8 FEET ABOVE MEAN WATER LEVEL AT FATHERPOINT, QUEBEC, CANADA INTERNATIONAL GREAT LAKES DATUM (I.G.L.D.) 1955.
3. ALL STATIONING WAS ~~IS~~ MEASURED FROM THE SURVEY BASELINE.

NO.	DATE	REVISION	BY

U.S. ARMY ENGINEER DISTRICT, DETROIT
CORPS OF ENGINEERS
DETROIT, MICHIGAN

DESIGNED BY: AW
DRAWN BY: DG
CHECKED BY: EB
REVIEWED BY:
P.E.
CHIEF, CIVIL DESIGN SECTION

PENTWATER HARBOR MICHIGAN

NORTH PIER AND REVETMENT REPAIRED

PRE-CONS ~~EXISTING~~ STRUCTURE CROSS SECTIONS

SCALE: 1/8 " = 1' - 0"
PLOT SCALE: 1/8 " = 1' - 0"
APRIL 1999
CAD FILE NAME: PWT04A99.DGN
DRAWING NUMBER
SHEET 4 OF 14

SOLICITATION NUMBER: DACW35-99-B-0017

US ARMY CORPS OF ENGINEERS DETROIT DISTRICT

$$$queue$$$

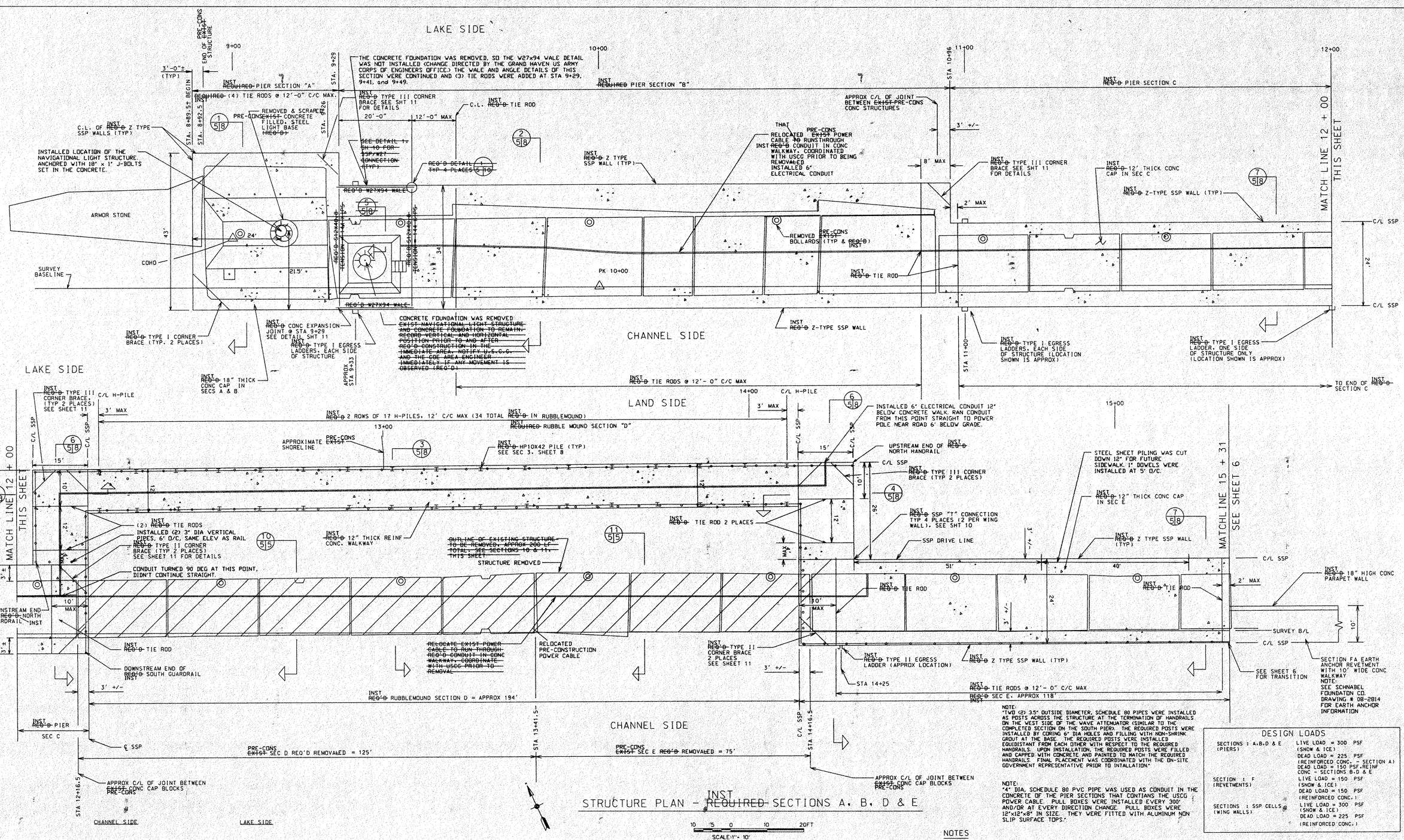

NOTE:
"TWO (2) 3.5" OUTSIDE DIAMETER, SCHEDULE 80 PIPES WERE INSTALLED AS POSTS ACROSS THE STRUCTURE AT THE TERMINATION OF HANDRAILS ON THE WEST SIDE OF THE WAVE ATTENUATOR (SIMILAR TO THE COMPLETED SECTION ON THE SOUTH PIER). THE REQUIRED POSTS WERE INSTALLED BY CORING 6" DIA HOLES AND FILLING WITH NON-SHRINK GROUT AT THE BASE. THE REQUIRED POSTS WERE INSTALLED EQUIDISTANT FROM EACH OTHER WITH RESPECT TO THE REQUIRED HANDRAILS. FINAL PLACEMENT WAS COORDINATED WITH THE ON-SITE GOVERNMENT REPRESENTATIVE PRIOR TO INTALLATION."

NOTE:
"4" DIA. SCHEDULE 80 PVC PIPE WAS USED AS CONDUIT IN THE CONCRETE OF THE PIER SECTIONS THAT CONTIANS THE USCG POWER CABLE. PULL BOXES WERE INSTALLED EVERY 300' AND/OR AT EVERY DIRECTION CHANGE. PULL BOXES WERE 12"x12"x8" IN SIZE. THEY WERE FITTED WITH ALUMINUM NON SLIP SURFACE TOPS."

DESIGN LOADS

SECTIONS : A, B, D & E (PIERS)	LIVE LOAD = 300 PSF (SNOW & ICE) DEAD LOAD = 225 PSF (REINFORCED CONC. - SECTION A) DEAD LOAD = 150 PSF (REINF CONC - SECTIONS B, D & E
SECTION : F (REVETMENTS)	LIVE LOAD = 150 PSF (SNOW & ICE) DEAD LOAD = 150 PSF (REINFORCED CONC.)
SECTIONS : SSP CELLS (WING WALLS)	LIVE LOAD = 300 PSF (SNOW & ICE) DEAD LOAD = 225 PSF (REINFORCED CONC.)

STRUCTURE PLAN - INST REQUIRED SECTIONS A, B, D & E

SCALE: 1" = 10'

LEGEND

- REQ'D GUARDRAIL & POSTS
- CENTERLINE REQ'D SSP
- BASELINE
- CONCRETE EXPANSION JOINT
- SURVEY CONTROL
- PRE-CONS EXISTING NAVIGATION LIGHT
- PRE-CONS EXISTING BOLLARD
- PRE-CONS EXISTING STONE
- PRE-CONS EXISTING STRUCTURE TO BE REMOVED

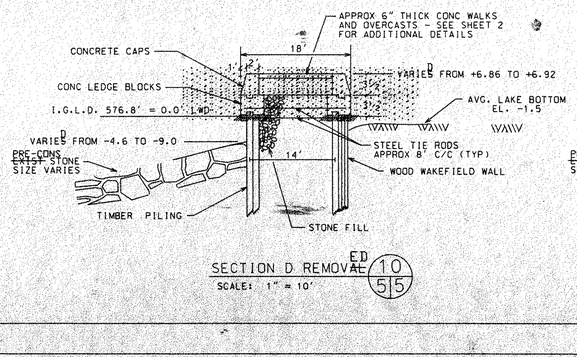

SECTION D REMOVED (10/5/5)
SCALE: 1" = 10'

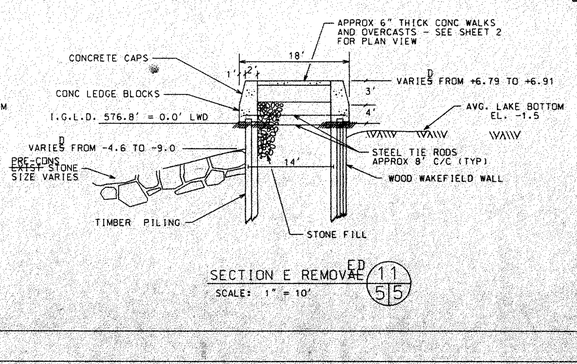

SECTION E REMOVED (11/5/5)
SCALE: 1" = 10'

NOTES

1. ALL ITEMS SHOWN ARE PRE-CONS EXISTING UNLESS INDICATED AS INST REQUIRED.
2. MAINTAINED SSP DRIVE LINE WITH RESPECT TO THE ESTABLISHED BASELINE. EXCEPT AS NOTED IN NOTE 7 BELOW.
3. SEE SHEET SPECIFICATIONS FOR SSP REQUIREMENTS.
4. ALL DRIVE LINE CORNERS ARE 90 DEGREES UNLESS OTHERWISE NOTED.
5. SEE SHEET 9 & 11 FOR TYPICAL CONC. DETAILS AND CONC. JOINTING PLAN.
6. SEE SHEET 12 FOR INST REQ'D LADDER DETAILS. SSP CORNER DETAILS AND TYPICAL STEEL DETAILS. SEE SHEET 11 FOR CORNER BRACE DETAILS.
7. FIELD VERIFIED SSP ALIGNMENT TO BE CLEARED PRE-CONS EXISTING STRUCTURE, WHICH MAY HAVE SHIFTED SINCE SURVEY WAS TAKEN. THEN INST REQUIRED.
8. PRE-CONS EXISTING CONC PARAPETS, PILE CAPS PIECES, AND TIMBERS, AS SHOWN FOR REMOVALED, ARE TO BE DISPOSED OF OFF SITE.
9. SEE SPECIFICATIONS FOR STONE GRADATIONS.
10. LADDERS SHALL BE INSTALLED AS SHOWN (EVERY 200 FT) ON BOTH SIDES OF THE RUBBLEMOUND & SECTIONS A, B, & C, AND ON THE CHANNEL SIDE OF THE SECTIONS E & FA. WERE
11. THE SSP LAYOUT SHOWN IS SCHEMATIC. THE CONTRACTOR SHALL COORDINATED THE INSTALLATION OF ALL JOINTS, TIE RODS, MISC STEEL ETC. SO THAT THE SSP IS ALIGNED PAN-TO-PAN. IF NECESSARY, SPECIAL PILES SHALL BE USED WERE
12. REMOVED & SCRAPED ALL PRE-CONS EXISTING STEEL BOLLARDS TO THE BOTTOM OF REQUIRED CONC CAP.
13. THE INSIDE PERIMETER OF ALL INST REQ'D SSP WALLS SHALL BE SUPPORTED BY INST REQ'D WALERS, OF WHICH SHALL BE CONNECTED AT CORNERS AS SHOWN ON SHEET 10. WERE

NO.	DATE	REVISION	BY

U.S. ARMY ENGINEER DISTRICT, DETROIT
CORPS OF ENGINEERS
DETROIT, MICHIGAN

DESIGNED BY: AW	PENTWATER HARBOR, MICHIGAN
DRAWN BY: JKL	NORTH PIER REVETMENT REPAIRED
CHECKED BY: AW	DETAIL PLAN
REVIEWED BY: P.E. CHIEF, CIVIL DESIGN SECTION	STRUCTURE PLAN STATION 8 + 39 TO STATION 15 + 31
	SCALE: AS SHOWN PLOT SCALE: 1"=10' APRIL 1999
	CAD FILE NAME: PWNOSA99.DGN
	SHEET 5 OF 14 DRAWING NUMBER

SOLICITATION NUMBER: DACW35-99-B-0017

$$Queue$$

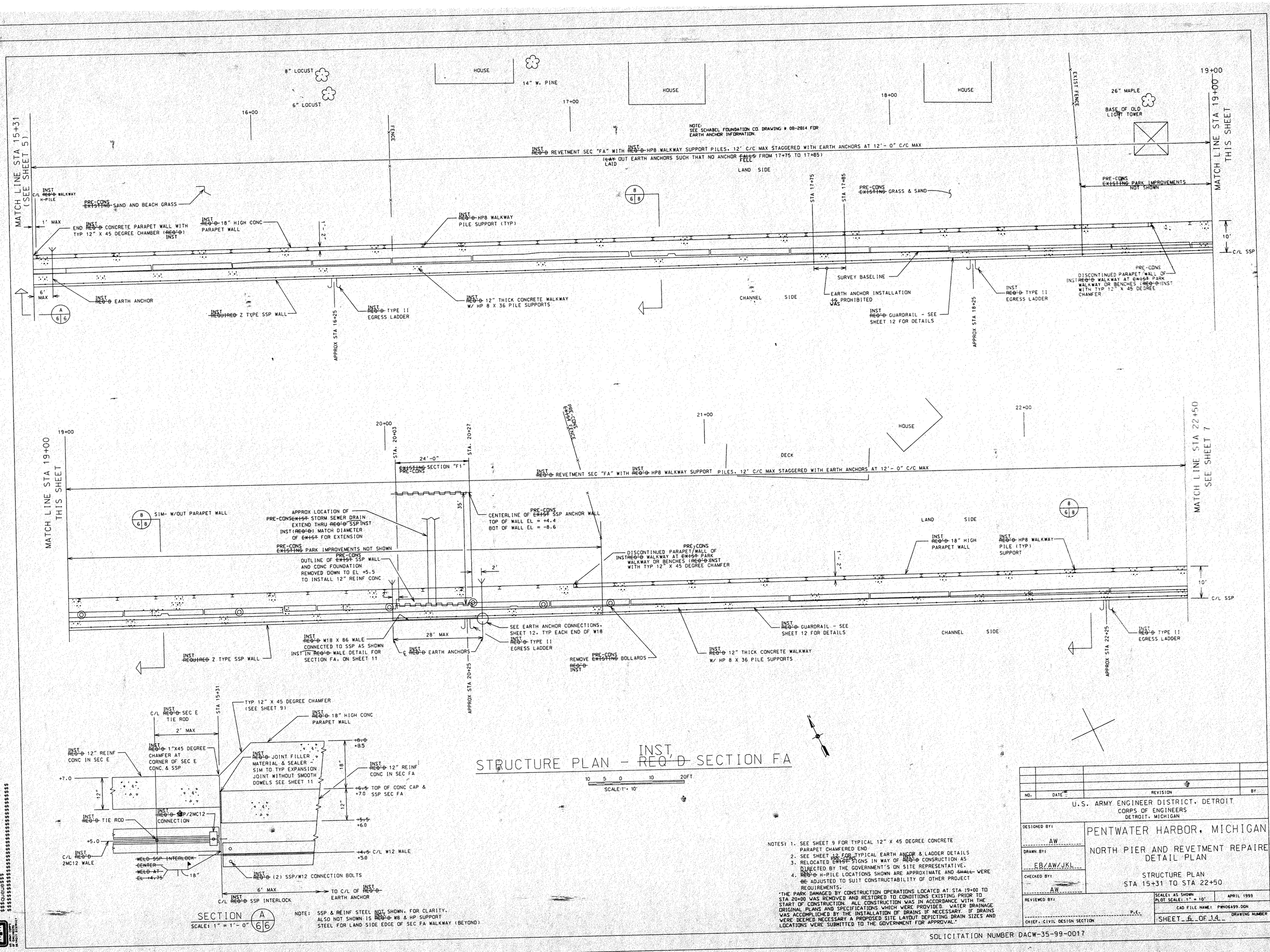

NOTES:
1. SEE SHEET 9 FOR TYPICAL 12" X 45 DEGREE CONCRETE PARAPET CHAMFERED END
2. SEE SHEET 12 FOR TYPICAL EARTH ANCOR & LADDER DETAILS
3. RELOCATED EXIST SIGNS IN WAY OF INST REQ'D CONSTRUCTION AS DIRECTED BY THE GOVERNMENT'S ON SITE REPRESENTATIVE.
4. REQ'D H-PILE LOCATIONS SHOWN ARE APPROXIMATE AND SHALL WERE BE ADJUSTED TO SUIT CONSTRUCTABILITY OF OTHER PROJECT REQUIREMENTS.

"THE PARK DAMAGED BY CONSTRUCTION OPERATIONS LOCATED AT STA 19+00 TO STA 20+00 WAS REMOVED AND RESTORED TO CONDITIONS EXISTING PRIOR TO START OF CONSTRUCTION. ALL CONSTRUCTION WAS IN ACCORDANCE WITH THE ORIGINAL PLANS AND SPECIFICATIONS WHICH WERE PROVIDED. WATER DRAINAGE WAS ACCOMPLICHED BY THE INSTALLATION OF DRAINS IF NECESSARY. IF DRAINS WERE DEEMED NECESSARY A PROPOSED SITE LAYOUT DEPICTING DRAIN SIZES AND LOCATIONS WERE SUBMITTED TO THE GOVERNMENT FOR APPROVAL."

NO.	DATE	REVISION	BY

U.S. ARMY ENGINEER DISTRICT, DETROIT
CORPS OF ENGINEERS
DETROIT, MICHIGAN

DESIGNED BY: AW
DRAWN BY: EB/AW/JKL
CHECKED BY: AW
REVIEWED BY: P.E. CHIEF, CIVIL DESIGN SECTION

PENTWATER HARBOR, MICHIGAN

NORTH PIER AND REVETMENT REPAIRED DETAIL PLAN

STRUCTURE PLAN
STA 15+31 TO STA 22+50

SCALE: AS SHOWN PLOT SCALE: 1" = 10' | APRIL 1999
CAD FILE NAME: PWN06A99.DGN | DRAWING NUMBER
SHEET 6 OF 14

SOLICITATION NUMBER DACW-35-99-0017

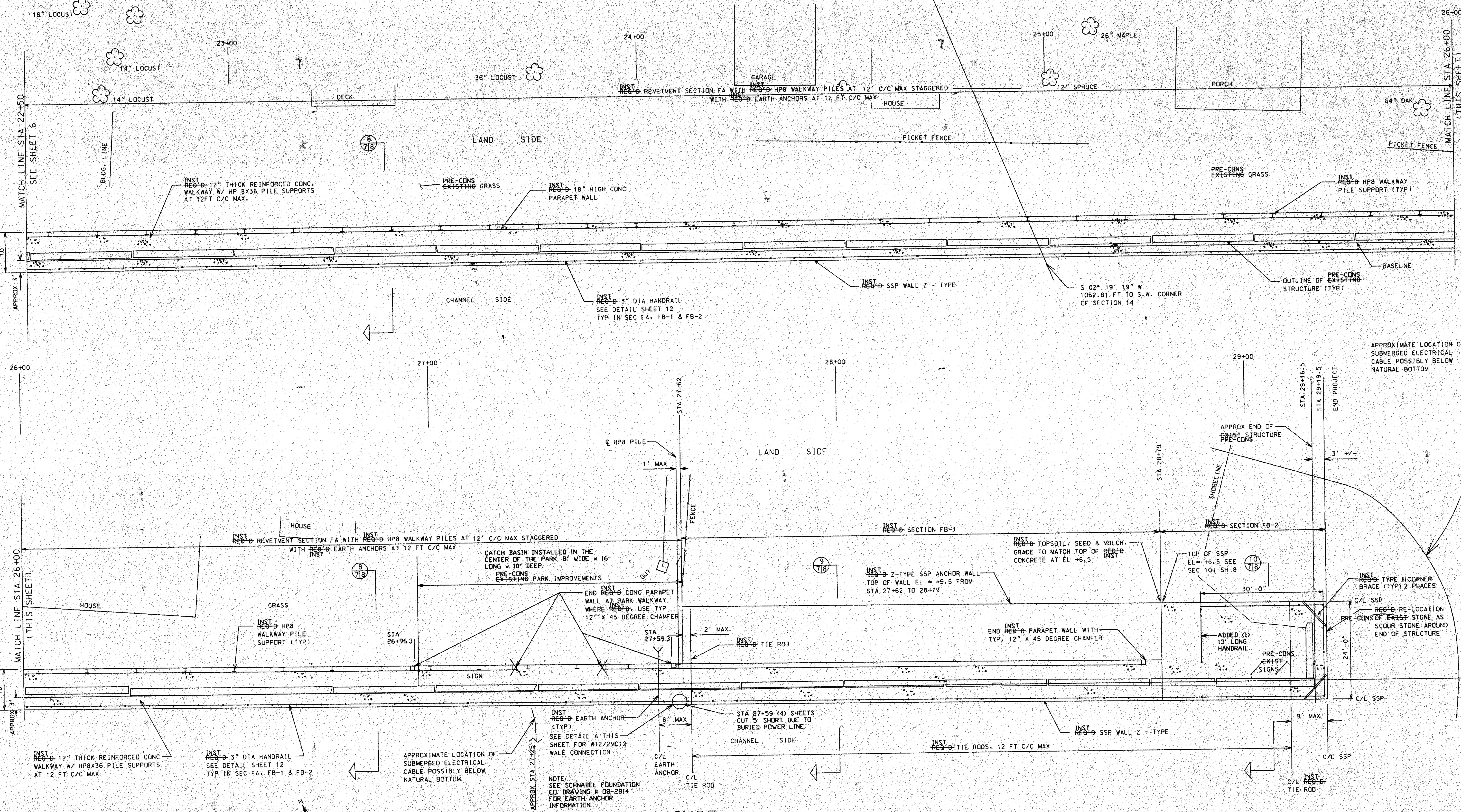

STRUCTURE PLAN - INST ~~REQ'D~~ SECTIONS FA, FB-1 & FB-2

10 5 0 10 20FT
SCALE: 1" = 10'

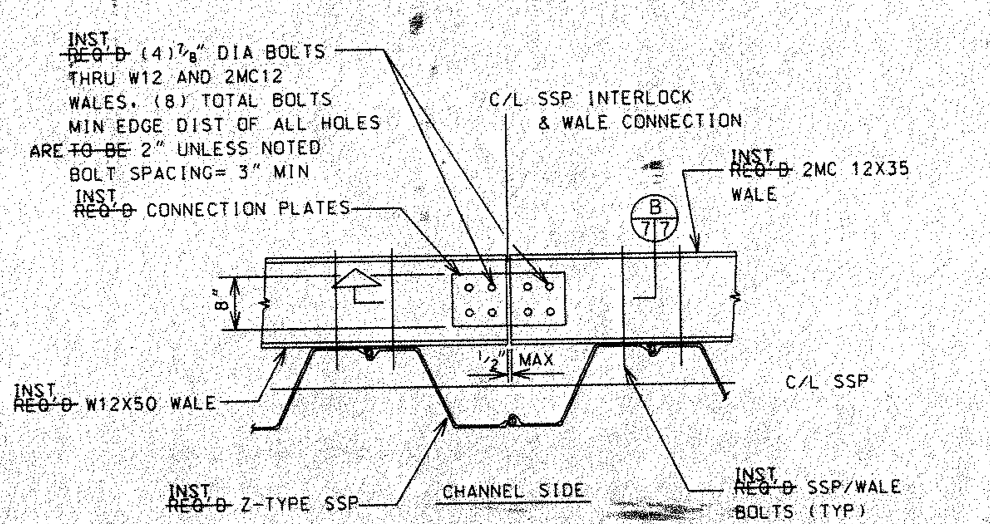

DETAIL A (7/7)
SCALE: 3/4" = 1'- 0"

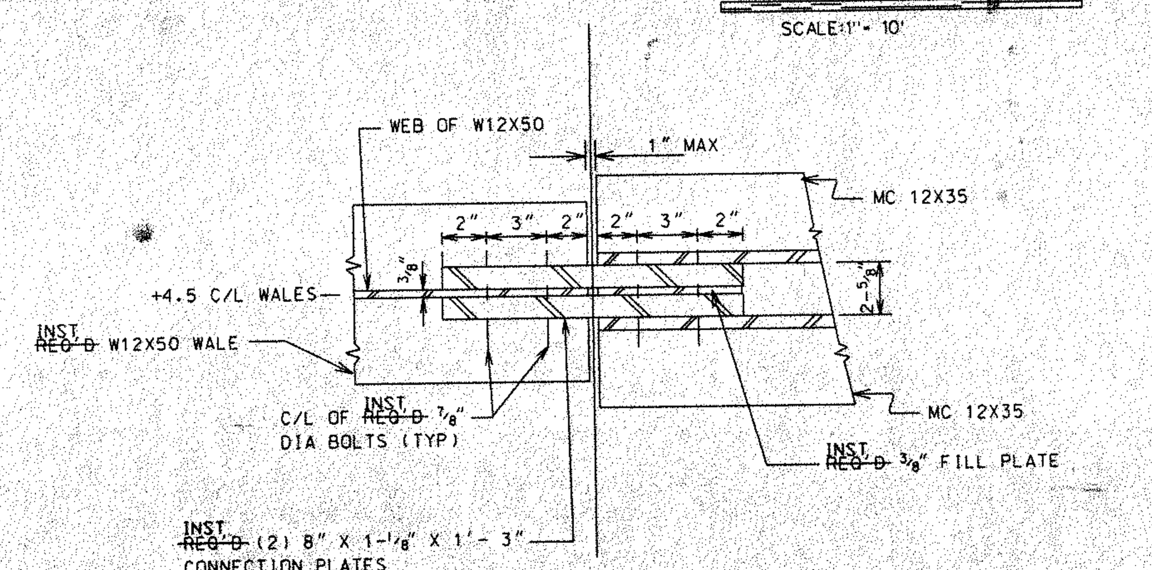

DETAIL B (7/7)
SCALE: 1-1/2" = 1'- 0"

NOTES:
1. SEE SHEET 9 FOR TYPICAL 12" X 45 DEGREE CONCRETE PARAPET CHAMFERED END.
2. RELOCATED PRE-CONS ~~EXIST~~ SIGNS IN WAY OF INST ~~REQ'D~~ CONSTRUCTION AS DIRECTED BY GOVERNMENT ON-SITE REPRESENTATIVE.
3. SEE SHEET 12 FOR TYPICAL EARTH ANCHOR AND LADDER DETAILS.
4. INST ~~REQ'D~~ H-PILE LOCATIONS SHOWN ARE APPROXIMATE AND WERE ~~SHALL BE~~ ADJUSTED TO SUIT CONSTRUCIBILITY OF OTHER PROJECT REQUIREMENTS.
5. "DELETE ALL REFERENCE TO H-PILES AND CARRIER BEAM FOR THE CONCRETE CAP WITHIN THE EXISTING PARK LIMITS."

NO.	DATE	REVISION	BY

U.S. ARMY ENGINEER DISTRICT, DETROIT
CORPS OF ENGINEERS
DETROIT, MICHIGAN

DESIGNED BY: AW
DRAWN BY: EB/AW/JKL
CHECKED BY: AW
REVIEWED BY:
P.E.
CHIEF, CIVIL DESIGN SECTION

PENTWATER HARBOR, MICHIGAN
NORTH PIER AND REVETMENT REPAIRED
DETAIL PLAN

STRUCTURE PLAN
STA 22 + 50 TO STA 29 + 19.5

SCALE: AS SHOWN
PLOT SCALE: 1" = 10'
APRIL 1999
CAD FILE NAME: PWN07A99.DGN
DRAWING NUMBER
SHEET 7 OF 14

SOLICITATION NUMBER DACW35-99-B-0017

$$$queue$$$
$$$$$$$$$$$$$$$$$$$$$$$$$$$$$$$

US ARMY CORPS OF ENGINEERS DETROIT DISTRICT

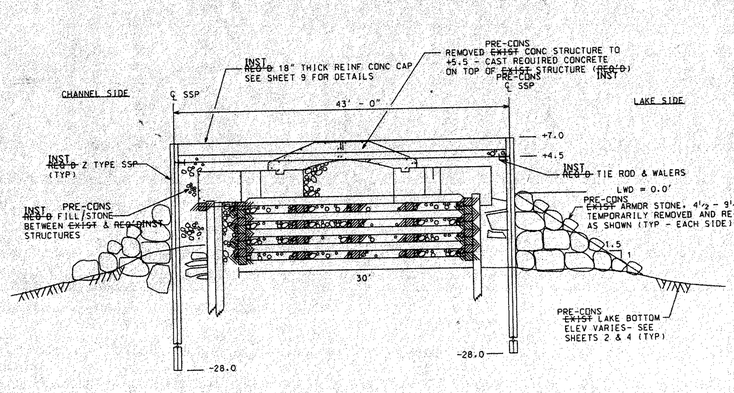

INST REQUIRED SECTION A (1 / 5 | 8)

SCALE: 1/8" = 1'- 0"

NOTE: PRE-CONS EXISTING STONE MAY HAVE BEEN ENCOUNTERED AS DEEP AS 26.0 FEET ON BOTH SIDES OF THE STRUCTURE FROM STA 10+00 OUT TO THE HEAD OF THE PIER. EXISTING STONE ENCOUNTERED ALONG THE SSP DRIVING LINE SHALL BE CLEARED IN ACCORDANCE WITH SPECIFICATION/SECTION 02139. PRE-CONS

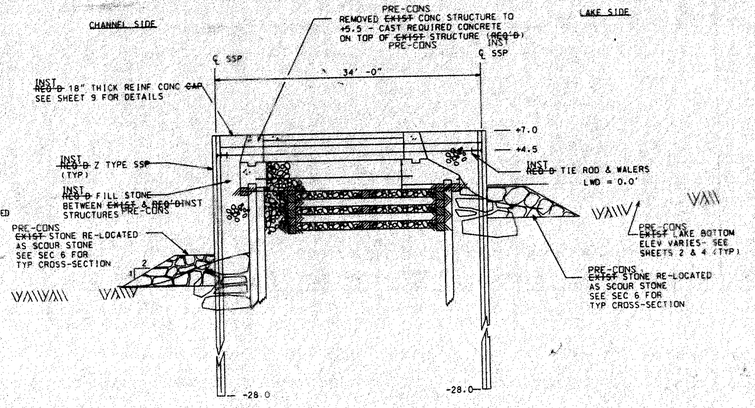

INST REQUIRED SECTION B (2 / 5 | 8)

SCALE: 1/8" = 1'- 0" (AT EXIST SECTIONS B/C)

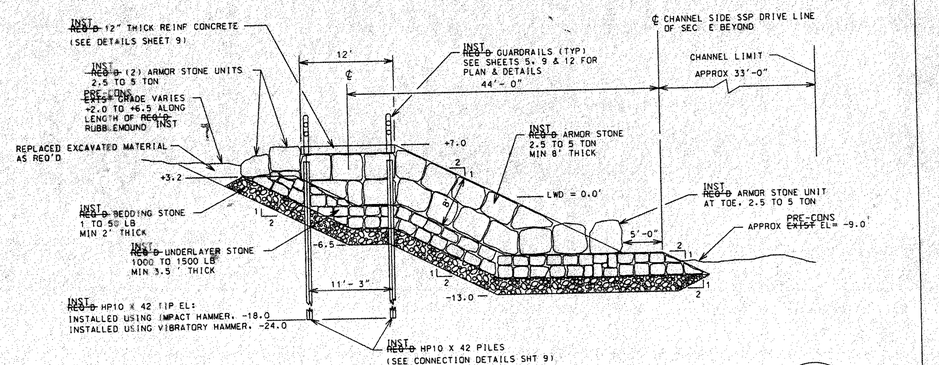

INST REQUIRED WAVE ATTENUATOR SECTION D (3 / 5 | 8)

SCALE: 1/8" = 1'-0"

NOTE: PRE-CONS EXISTING PIER SECTIONS D & E WERE REMOVED BETWEEN STA 12+16.5 & STA 14+16.5.

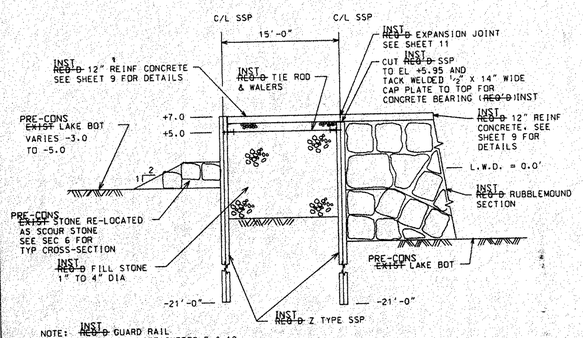

NOTE: INST REQ'D GUARD RAIL NOT SHOWN, SEE SHEETS 5 & 12 FOR PLAN & DETAILS

INST REQUIRED SSP WING WALL (4 / 5 | 8)

SCALE: 1/8" = 1'- 0"

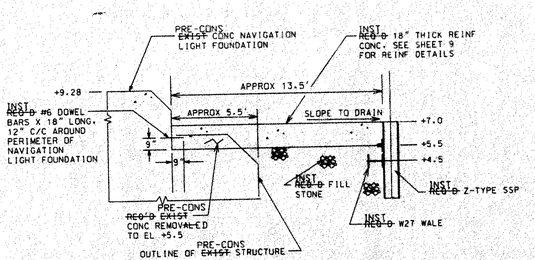

SECTION 5 (5 / 5 | 8)

SCALE: 1/4" = 1'- 0"

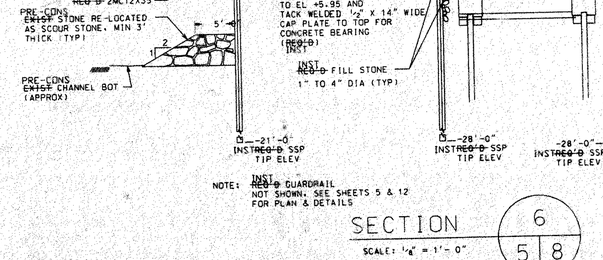

NOTE: INST REQ'D GUARDRAIL NOT SHOWN, SEE SHEETS 5 & 12 FOR PLAN & DETAILS

SECTION 6 (6 / 5 | 8)

SCALE: 1/8" = 1'- 0"

NOTE:
"EXCAVATION MAY HAVE BEEN REQUIRED FROM AN ELEVATION OF +7.0 TO THE LWD AT +0.0, AS NECESSARY TO DRIVE H-PILES. EXCAVATED MATERIAL WAS REPLACED WITH STONE FILL PRIOR TO DRIVING H-PILES OR STARTING EARTH ANCHOR DRILLING. ADDITIONAL ACTION WAS TAKEN AS NEEDED TO PROTECT THE PRE-CONS STRUCTURES FROM VIBRATION DUE TO WORK ACTIVITIES."

"LANDSCAPE FABRIC WAS PLACED ON THE BACKSIDE OF THE REVETMENT SECTION FROM STA 27+62 TO STA 20+60 PRIOR TO TOP SOIL, SEED AND MULCH PLACEMENT TO PREVENT TOP SOIL EROSION. SPECIFICATIONS OF THE PROPOSED FABRIC TO BE USED WAS SUBMITTED TO THE GOVERNMENT FOR APPROVAL PRIOR TO PURCHASE AND USE."

"THE TOP OF THE REQUIRED STEEL SHEET PILINGS ON THE CROSS SECTIONS 8, 9 AND 10 LOCATED ON THE ABOVE REFERENCED DRAWING WERE REVISED FROM AN ELEVATION OF +6.5' TO +7.0' ABOVE LWD."

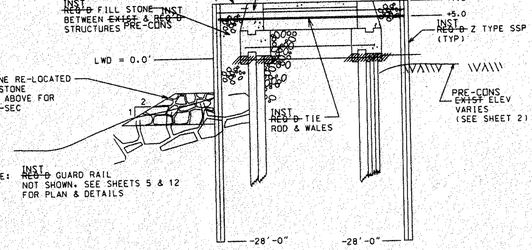

INST REQUIRED SECTIONS C & E (7 / 5 | 8)

SCALE: 1/8" = 1'- 0"

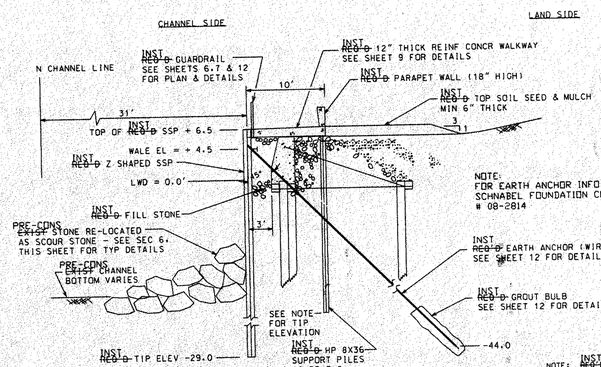

NOTE: FOR EARTH ANCHOR INFO SEE SCHNABEL FOUNDATION CO. DRAWING # 08-2814

INST REQUIRED SECTION FA (8 / 6,7 | 8)

SCALE: 1/8" = 1'- 0"

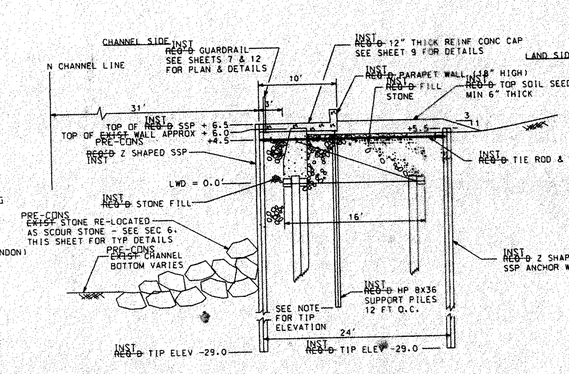

NOTE: INST REQ'D HP8X36 TIP ELEVATION: INSTALLED USING IMPACT HAMMER, -18.0 INSTALLED USING VIBRATORY HAMMER, -24.0

INST REQUIRED SECTION FB-1 (9 / 7 | 8)

SCALE: 1/8" = 1'- 0"

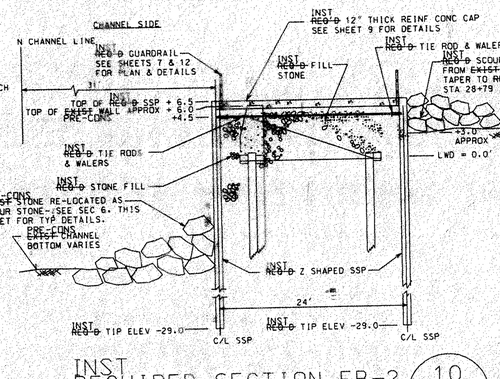

INST REQUIRED SECTION FB-2 (10 / 7 | 8)

SCALE: 1/8" = 1'- 0"

NOTE: SSP SCOUR STONE, 250-500 LBS. ~~IS~~ REQ'D WHEN QUANTITIES OF EXIST STONE ~~ARE~~ EXPENDED. REQ'D INST SCOUR STONE ~~SHALL BE~~ PLACED AS SHOWN IN SECTION 6, THIS SHEET. ~~WAS~~ WERE PRE-CONS ~~WAS~~ INST

NO.	DATE	REVISION	BY

U.S. ARMY ENGINEER DISTRICT, DETROIT
CORPS OF ENGINEERS
DETROIT, MICHIGAN

DESIGNED BY: AW
DRAWN BY: AW/JKL
CHECKED BY: AW
REVIEWED BY:

PENTWATER HARBOR MICHIGAN

NORTH PIER AND REVETMENT REPAIRED

REPAIR SECTIONS

P.E.
CHIEF, CIVIL DESIGN SECTION

SCALE: AS SHOWN
PLOT SCALE: 1/8" = 1'- 0"
APRIL 1999
CADD FILE NAME: PW008A99.DGN
SHEET 8 OF 14
DRAWING NUMBER

SOLICITATION NUMBER: DACW35-99-B-0017

$$$queue$$$

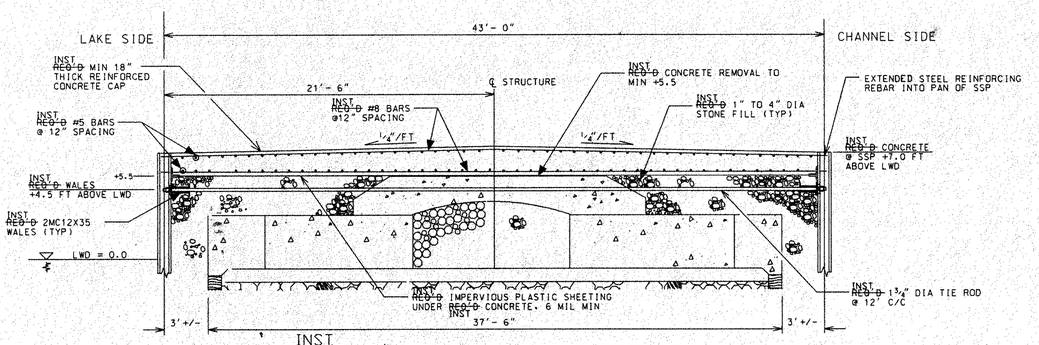

INST
REQ'D 43' WIDE REINFORCED CONCRETE CAP

SCALE: ¼" = 1'-0" (PIER SECTION A)

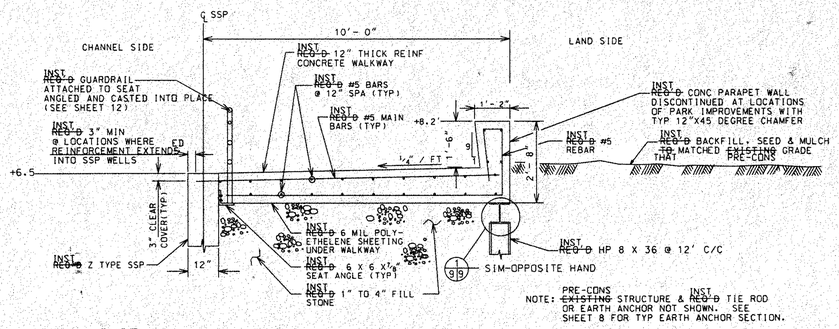

INST
REQ'D 10' WIDE CONCRETE WALKWAY AND PARAPET DETAIL

SCALE: ½" = 1'-0" (REQ'D SECTIONS FA & FB-1)
INST

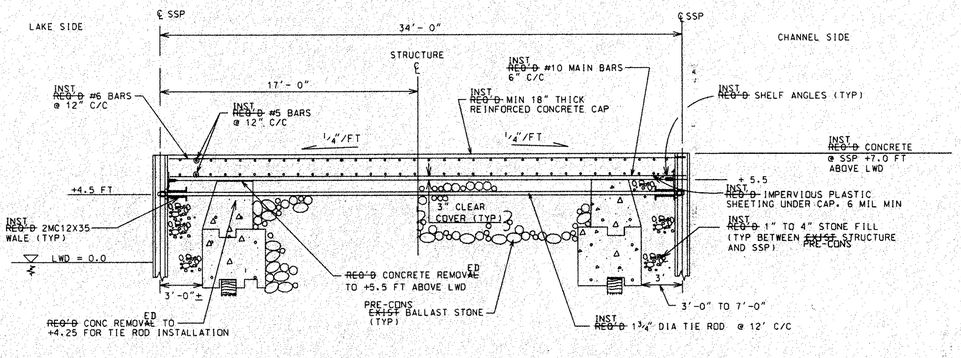

INST
REQUIRED 34' WIDE REINFORCED CONCRETE CAP DETAIL

SCALE: ¼" = 1'-0" (PIER SECTION B/C)

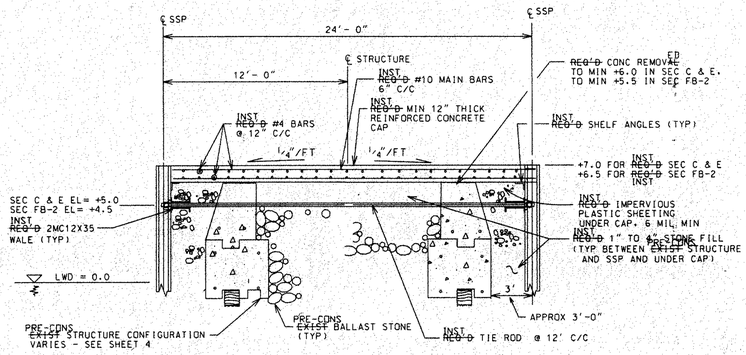

INST
REQUIRED 24' WIDE REINFORCED CONCRETE CAP DETAIL

SCALE: ¼" = 1'-0" (REQ'D SECTIONS C, E & FB-2)
INST

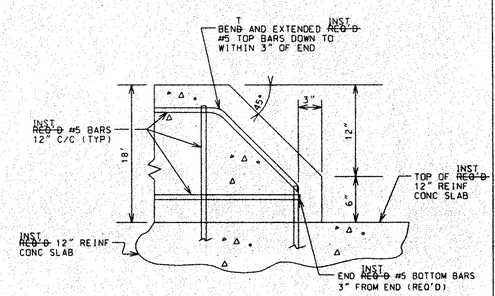

TYPICAL 12" X 45 DEGREE CHAMFER FOR REQ'D CONCRETE PARAPET END
INST

SCALE: 1½" = 1'-0"

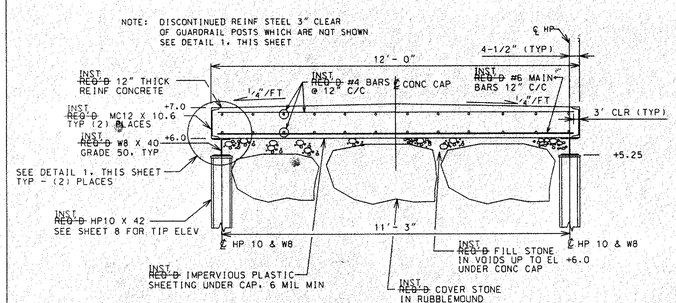

12 FT WIDE CONCRETE WALKWAY DETAIL

SCALE: ½" = 1'-0" (SECTION D RUBBLEMOUND SSP WING WALLS)

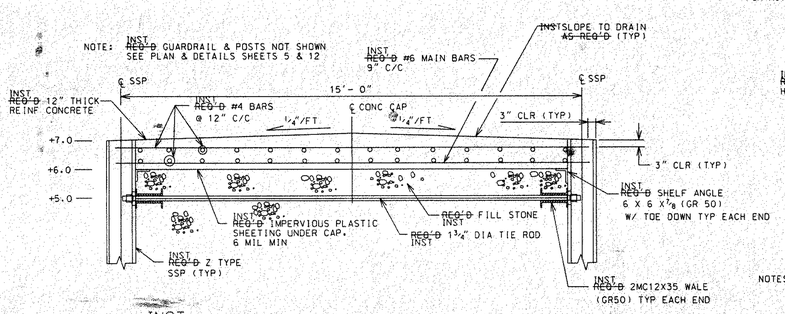

INST
REQ'D 15 FT WIDE CONCRETE CAP DETAIL

SCALE: ½" = 1'-0" (SECTION D RUBBLEMOUND SSP WING WALLS)

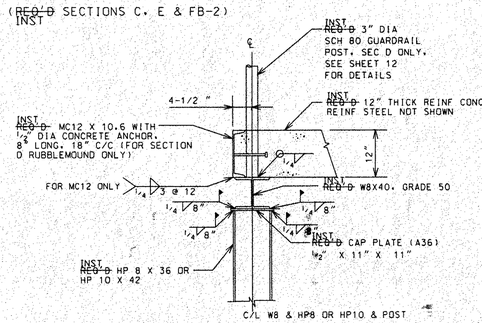

DETAIL 1/9

SCALE: ¾" = 1'-0"

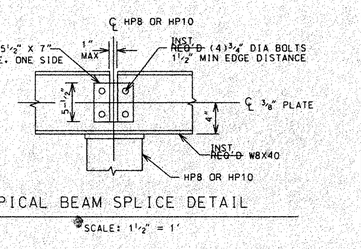

TYPICAL BEAM SPLICE DETAIL

SCALE: 1½" = 1'

NOTES:
1. DASHED LINE ITEMS REPRESENT THE EXISTING STRUCTURE. INST REQ'D WORK IS STATED AS SUCH.
2. SEE SHEET 6, 7 & 8 FOR SSP REQUIREMENTS.
3. SEE THIS SHEET FOR TYPICAL REINF CONC DETAILS REQ'D FOR EACH DIFFERENT SPAN OF CONC SLAB.
4. ALL ELEVATIONS WERE REFERENCED FROM I.G.L.D. = 576.8 (LOW WATER DATUM) PRE-CONS
5. EXIST CONC PARAPETS AND PILE CAP PIECES REMOVED ARE TO BE REUSED AS PART OF APPLICABLE RUBBLE MOUND LAYER SHOWN SHEET 12.
6. SEE SPECIFICATIONS FOR STONE GRADATIONS.
7. BLENDED CROWN ELEVATIONS WITHIN 5 FEET BETWEEN PIER OR REVETMENT SECTIONS HAVING DIFFERENT WIDTHS.
8. FOR MINIMUM CONCRETE COVER OVER REINFORCING STEEL, SEE NOTE 6, SHEET 11.

NO.	DATE	REVISION	BY

U.S. ARMY ENGINEER DISTRICT, DETROIT
CORPS OF ENGINEERS
DETROIT, MICHIGAN

DESIGNED BY: AW
DRAWN BY: AW/JKL
CHECKED BY: AW
REVIEWED BY: P.E.
CHIEF, CIVIL DESIGN SECTION

PENTWATER HARBOR MICHIGAN
NORTH PIER AND REVETMENT REPAIRED
CONCRETE CAP AND WALKWAY DETAILS

SCALE: AS SHOWN
PLOT SCALE: ½" = 1'-0"
APRIL 1999
CADD FILE NAME: PW009499.DGN
DRAWING NUMBER
SHEET 9 OF 14

SOLICITATION NUMBER: DACW35-99-B-0017

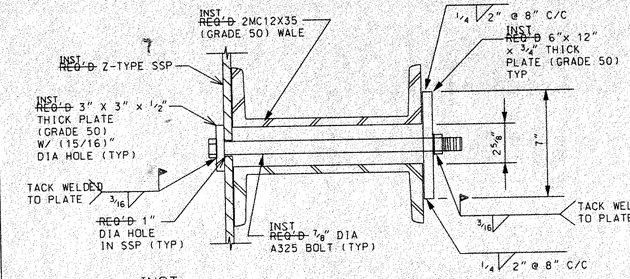

INST REQ'D TYPICAL SSP/WALE CONNECTION

SCALE: 3" = 1'-0" (FOR 2MC WALE ONLY)

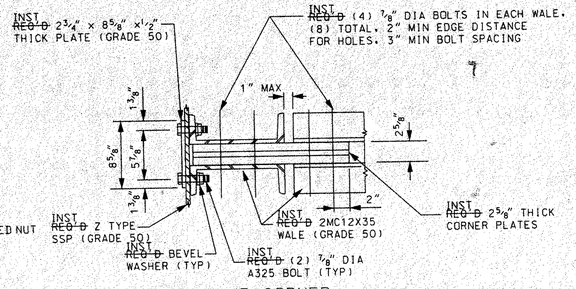

TYPICAL SSP/WALE CORNER BOLT & PLATE CONNECTION SECTION

SCALE: 1 1/2" = 1'-0"

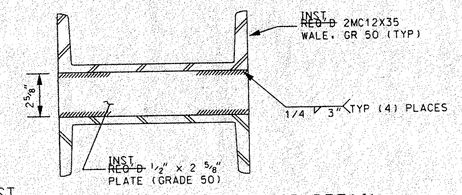

INST REQ'D TYPICAL WALE SEPARATOR DETAIL

SCALE: 3" = 1'-0" (FOR MC12 WALE ONLY)

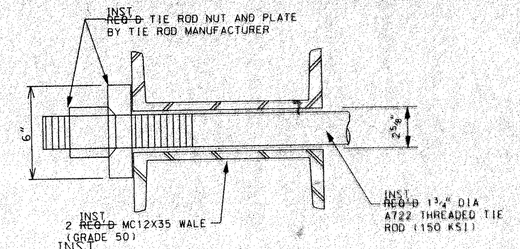

INST REQ'D TYPICAL TIE ROD SECTION

SCALE: 3" = 1'-0"

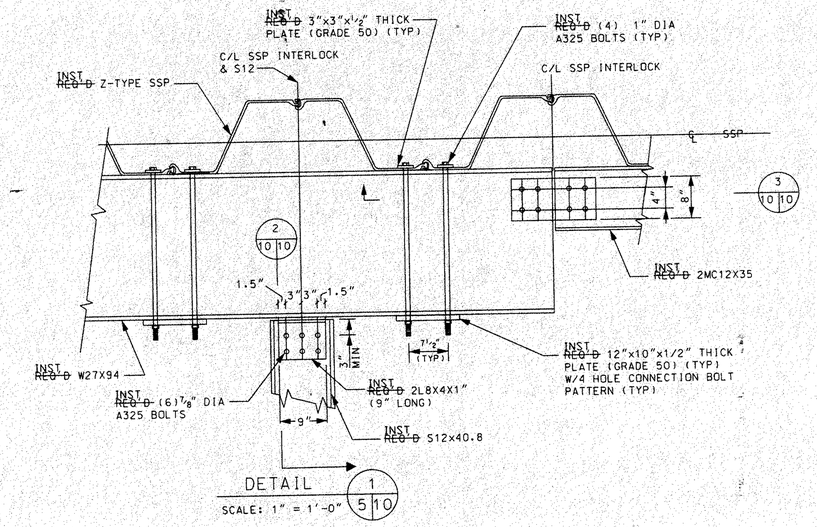

DETAIL 1 (5 10)

SCALE: 1" = 1'-0"

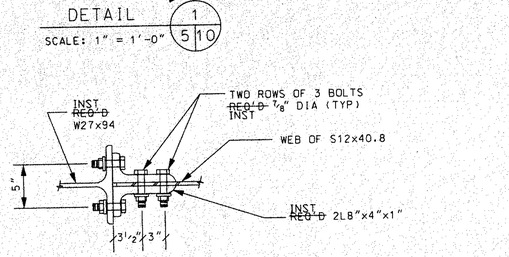

SECTION 2 (10 10)

SCALE: 1 1/2" = 1'-0"

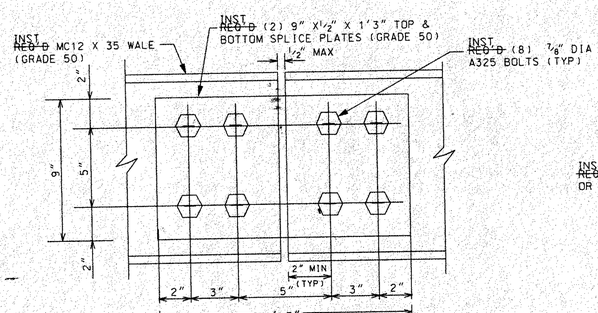

NOTE: STAGGERED SPLICES OF TOP AND BOTTOM WALE CHANNELS AND LOCATED THEM NEAR 1/3 POINTS BETWEEN TIE RODS

TYPICAL WALE SPLICE PLATE DETAIL

SCALE: 3" = 1'-0"

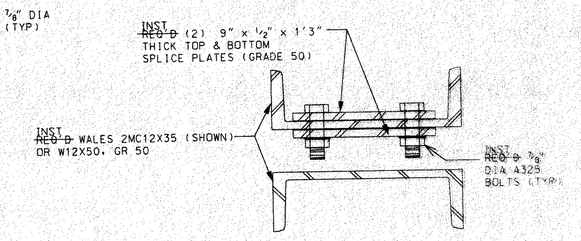

WALE SPLICE PLATE SECTION

SCALE: 3" = 1'-0"

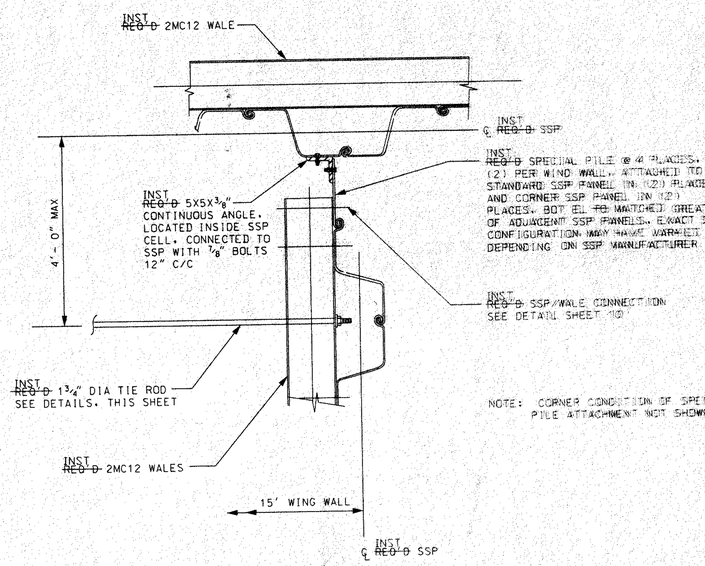

NOTE: CORNER CONDITION OF SPECIAL PILE ATTACHMENT NOT SHOWN

SPECIAL "T" PILE DETAIL

(LOCATED @ 2 WING WALLS) SCALE: 3/4" = 1'-0"

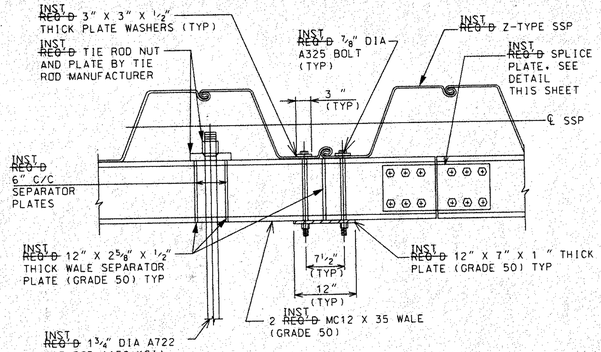

INST REQ'D SSP WALL PLAN FOR TIE RODS

SCALE: 1" = 1'-0" (SEE SHEET 11 FOR EARTH ANCHOR PLAN AND SEAT ANGLE ARRANGEMENTS)

NOTE:
ALSO FOR EARTH ANCHOR INFORMATION SEE SCHNABEL FOUNDATION CO. DRAWING# 08-2814

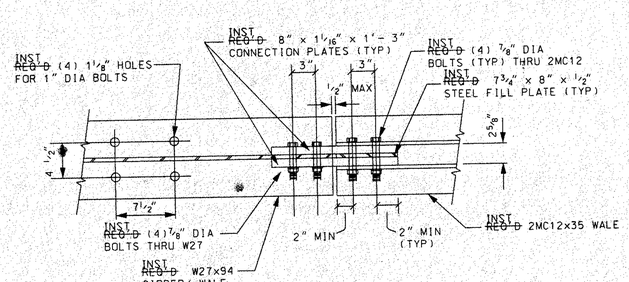

SECTION 3 (10 10)

SCALE: 1 1/2" = 1'-0"

NOTES:
1. ALL STEEL PLATE ~~IS~~ WAS MIN GRADE A50 UNLESS NOTED.
2. ALL STRUCTURAL SHAPES ~~ARE~~ WERE GRADE 50 UNLESS NOTED.
3. ALL BOLTS ~~ARE~~ WERE A325 UNLESS NOTED.
4. DRILLED HOLES 1/16" OVER NOMINAL BOLT DIAMETER ~~DO~~ DID NOT REQUIRE PLATE WASHERS UNLESS NOTED.
5. ALL OVERSIZE HOLES REQUIRED MIN 5/16" PLATE WASHERS WITH DRILLED HOLES UNDER BOLT HEAD OR NUT

NO.	DATE	REVISION	BY

U.S. ARMY ENGINEER DISTRICT, DETROIT
CORPS OF ENGINEERS
DETROIT, MICHIGAN

DESIGNED BY: AW	PENTWATER HARBOR MICHIGAN
DRAWN BY: DAG/JKL	NORTH PIER AND REVETMENT REPAIRED
CHECKED BY: ~~AW~~	STEEL SECTIONS AND DETAILS
REVIEWED BY: P.E. CHIEF, CIVIL DESIGN SECTION	SCALE: AS SHOWN PLOT SCALE: 1" = 1'-0" APRIL 1999
	CADD FILE NAME: PW010A99.DGN
	SHEET 10 OF 14 DRAWING NUMBER

SOLICITATION NUMBER: DACW35-99-B-0017

$$$queue$$$

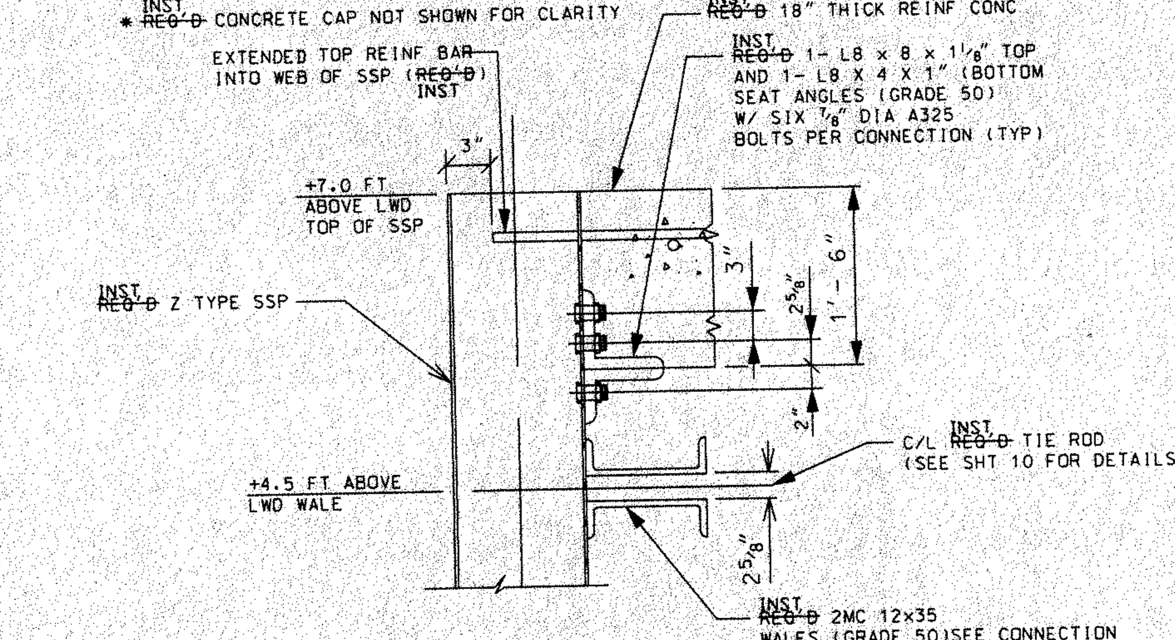

INST ~~REQ'D~~ WALE AND SEAT ANGLE SECTION

SCALE: 1" = 1'-0" (SECTIONS A & B WHERE 18" CAP IS REQ'D)

CHANNEL SIDE

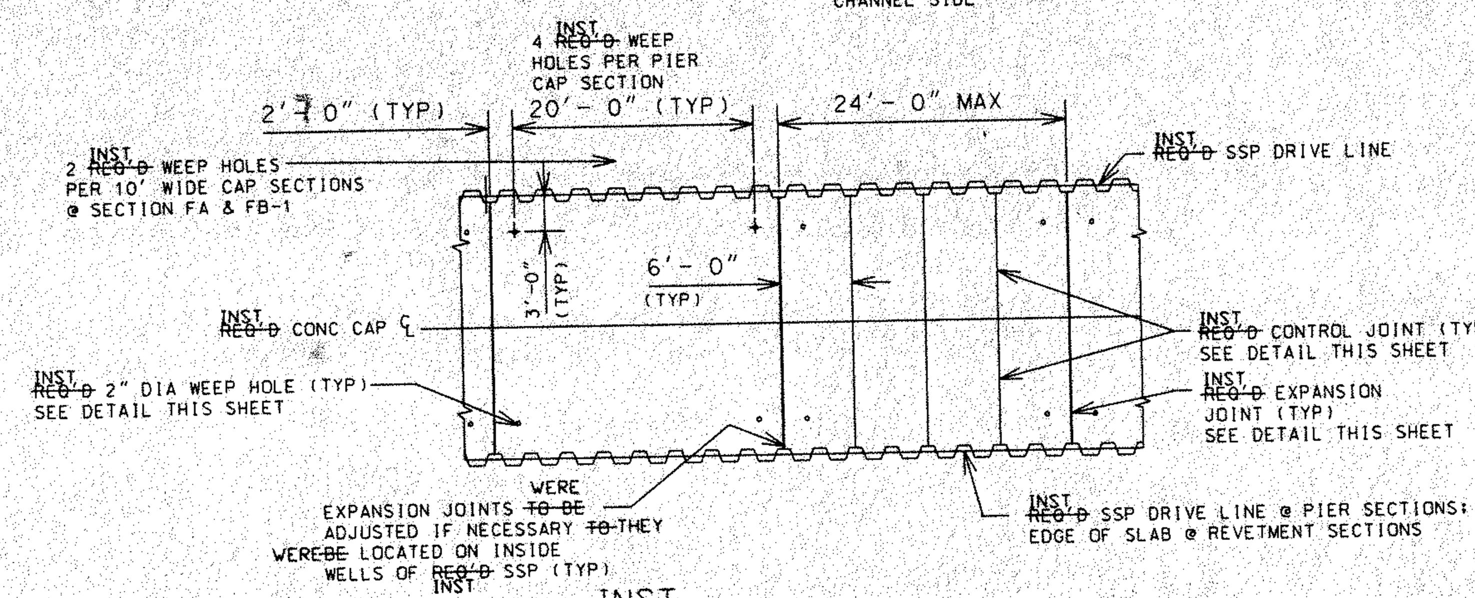

INST ~~REQUIRED~~ CONCRETE CAP

JOINTING PLAN (TYP FOR ALL SPANS)
NOT TO SCALE

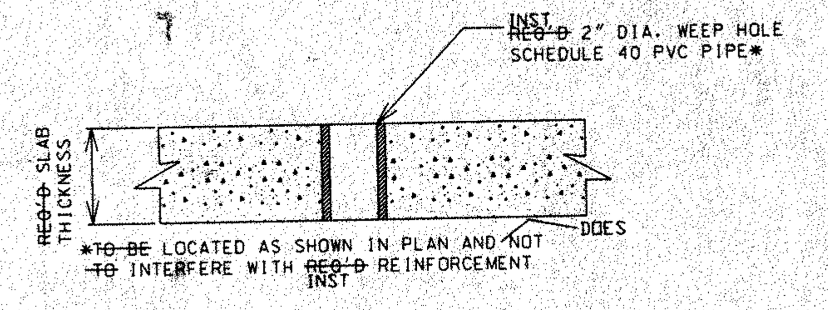

TYPICAL WEEP HOLE DETAIL

SCALE: 1 1/2" = 1'-0"

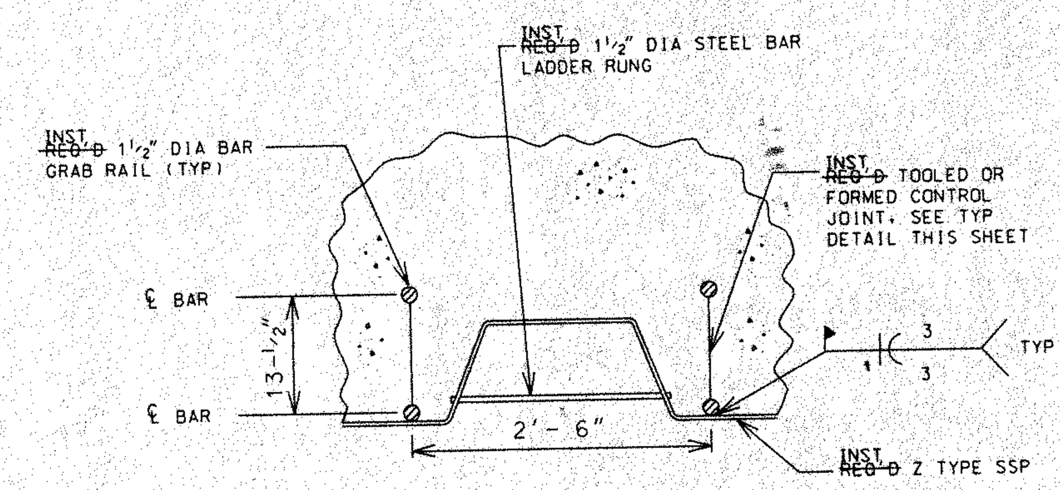

CONTROL JOINT PLAN AT TYPE II LADDER

SCALE: 1" = 1'-0"

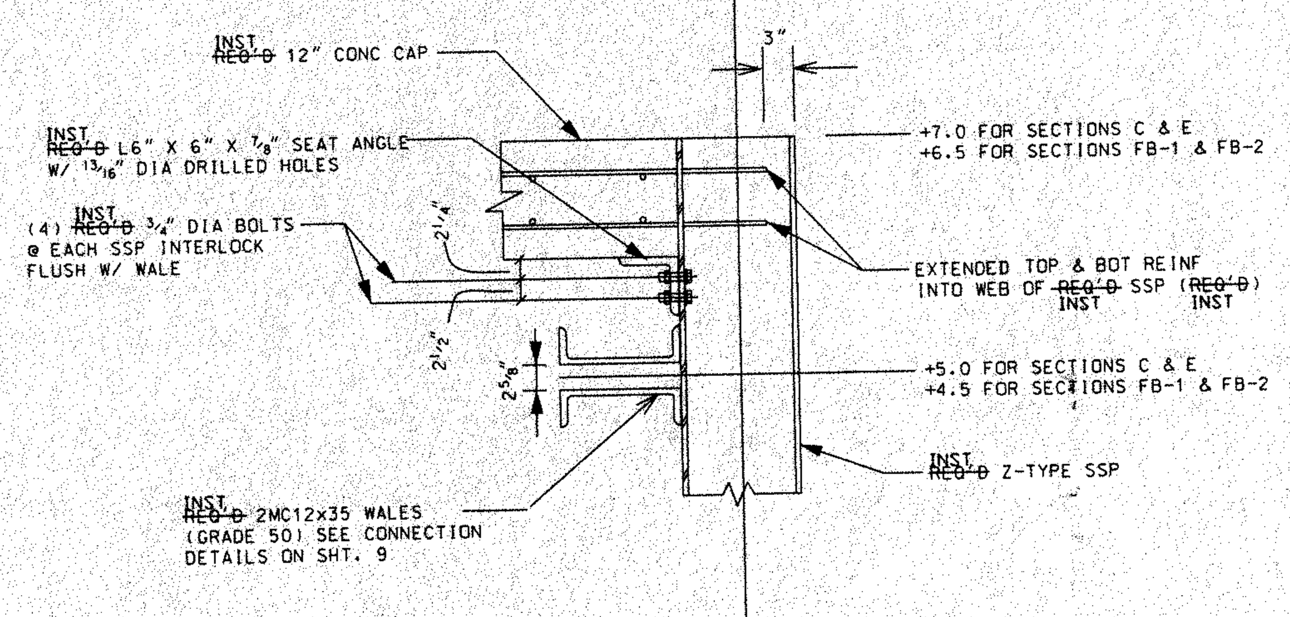

NOTE:

MIN 5/16" PLATE WASHERS WITH 13/16" DIA DRILLED HOLES ARE INST ~~REQ'D~~ UNDER EACH 3/4" DIA BOLT HEAD OR NUT ~~REQ'D~~ INST WHERE HOLE IN CONNECTING PART IS OVERSIZED (GREATER THAN 13/16" DIA)

INST ~~REQ'D~~ WALE AND SEAT ANGLE SECTION

(SECTIONS C, E, FB1, & FB2 ONLY)
SCALE: 1" = 1'-0"

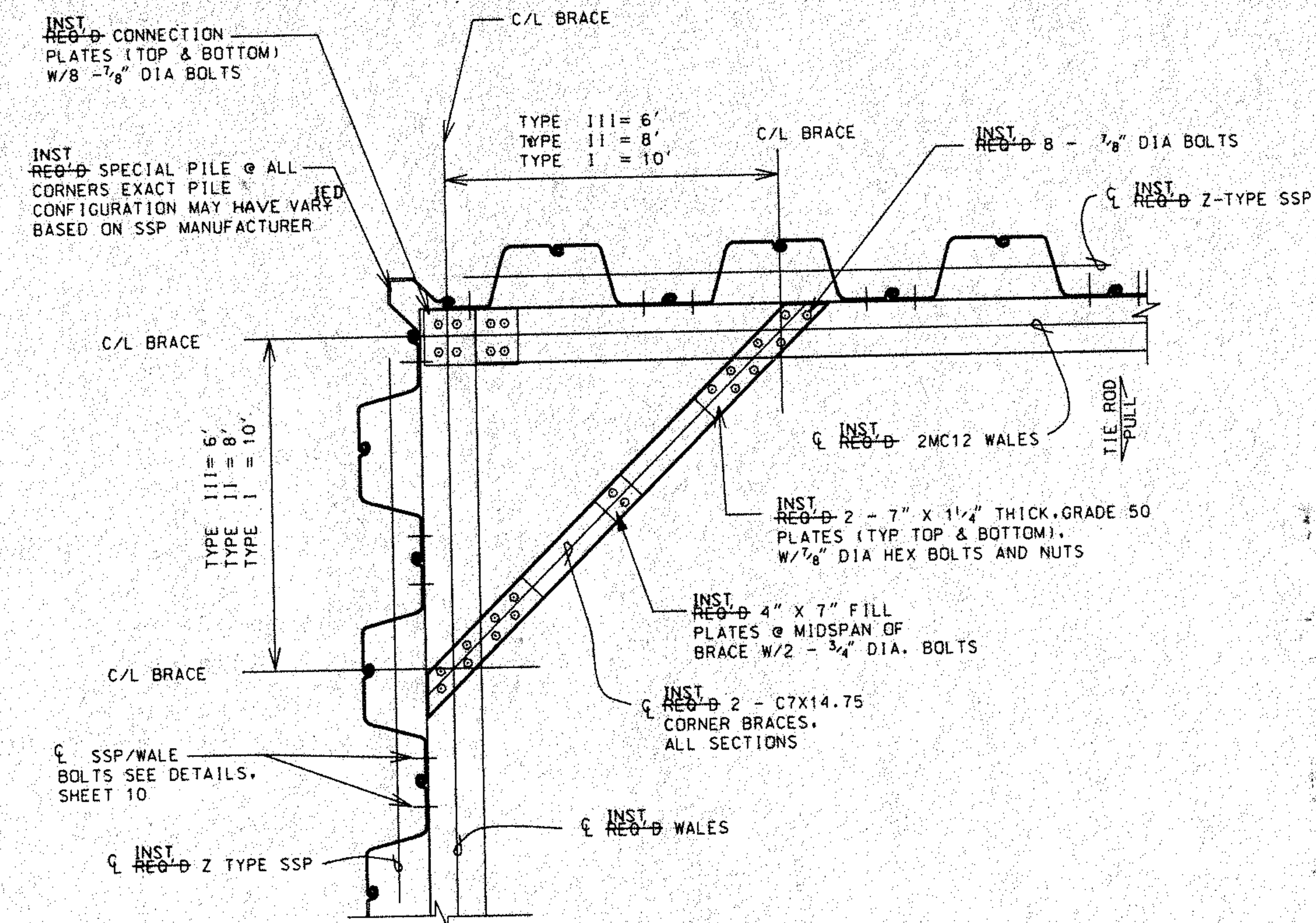

CORNER BRACE DETAILS TYPE I, II & III

SCALE: 1/2" = 1'- 0"

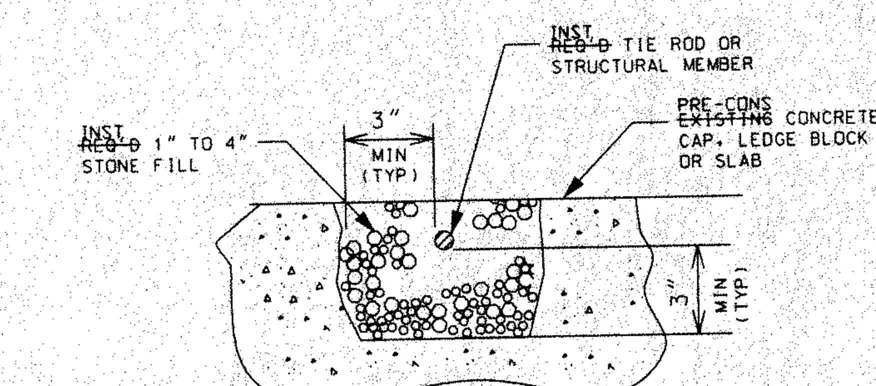

TYPICAL CONCRETE TRENCH DETAIL

SCALE: 3" = 1'-0"

NOTE:
FOR EARTH ANCHOR INFORMATION SEE SCHNABEL FOUNDATION CO. DRAWING # 08-2814

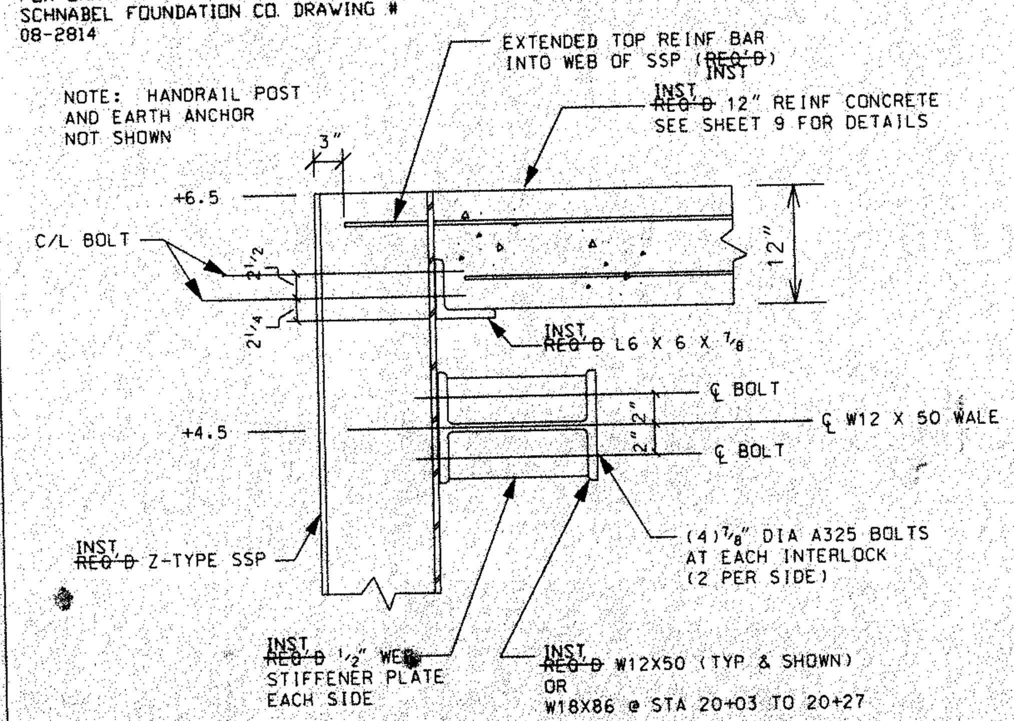

INST ~~REQ'D~~ WALE AND SEAT ANGLE SECTION

(EARTH ANCHOR SECTION FA W/ 12" CONCRETE CAP)
SCALE: 1" = 1'-0"

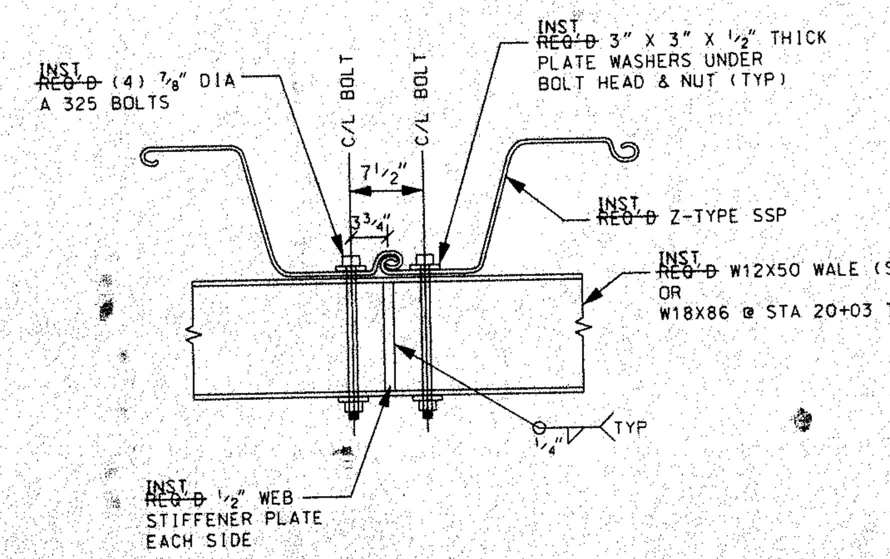

INST ~~REQ'D~~ SSP/WALE PLAN FOR SECTION FA

SCALE: 1" = 1'- 0"

NOTE:
"EXPANSION JOINTS WERE CONTINUOUS ACROSS PARAPET WALL, WITH TWO ADDITIONAL 3/4" GREASED DOWELS PROVIDED PER JOINT."

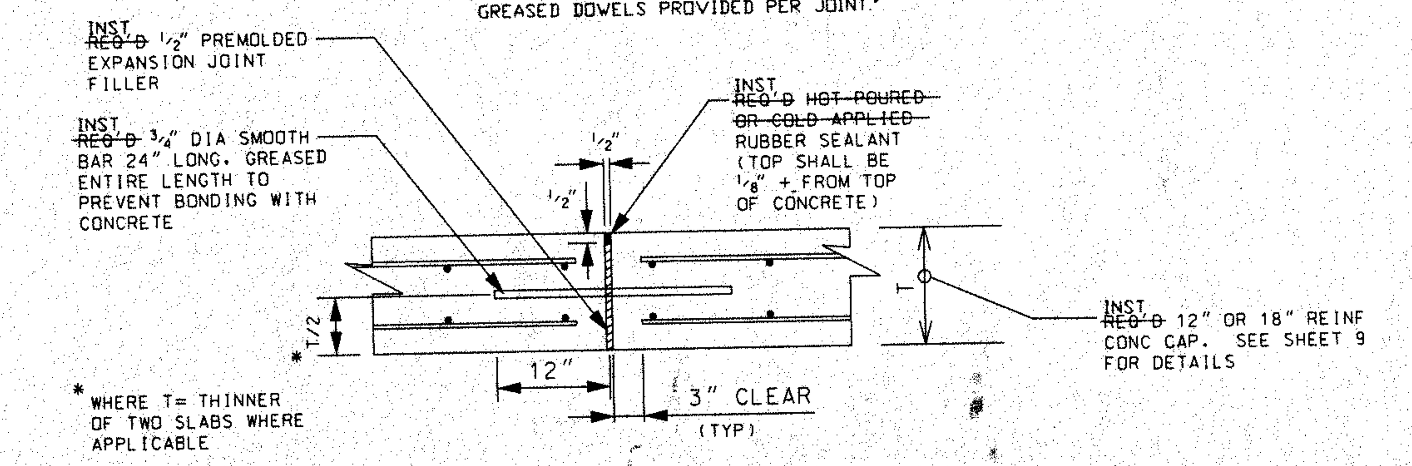

TYPICAL CONCRETE EXPANSION JOINT DETAIL

SCALE: 1" = 1'-0"

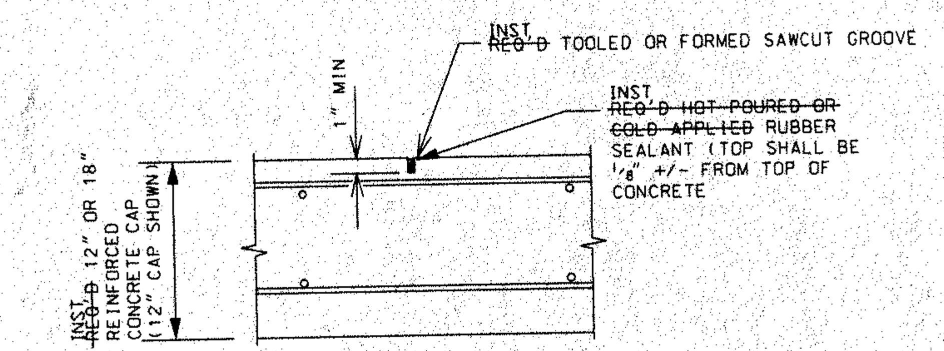

TYPICAL CONCRETE CONTROL JOINT

SCALE: 1 1/2" = 1'-0"

NOTES:

1. ALL STEEL PLATES ARE ~~TO BE~~ MIN GRADE 50, UNLESS NOTED OTHERWISE.
2. ALL STRUCTURAL SHAPES WERE ~~ARE~~ GRADE 50, UNLESS NOTED OTHERWISE.
3. ALL BOLTS WERE ~~ARE~~ A325 UNLESS NOTED OTHERWISE.
4. DRILLED HOLES 1/16" OVER NOMINAL BOLT DIAMETER DID ~~DO~~ NOT REQUIRE PLATE WASHERS UNLESS NOTED. ALL OVERSIZE HOLES REQUIRED MIN 5/16" PLATE WASHERS WITH DRILLED HOLES UNDER BOLT OR NUT HEAD.
5. CONTRACTOR ~~TO~~ COORDINATED LOCATION OF WEEP HOLES.
6. MIN CONC COVER FOR REINFORCING STEEL WAS ~~SHALL BE~~ AS FOLLOWS:
   18" THICK CONCRETE= 3" EVERYWHERE
   12" THICK CONCRETE: 1 1/2" FOR TOP #5 BARS
   3" FOR ALL BOTTOM BARS AND AT ENDS

NO.	DATE	REVISION	BY

U.S. ARMY ENGINEER DISTRICT, DETROIT
CORPS OF ENGINEERS
DETROIT, MICHIGAN

DESIGNED BY: AW
DRAWN BY: AW/ JKL
CHECKED BY: AW
REVIEWED BY: P.E.
CHIEF, CIVIL DESIGN SECTION

PENTWATER HARBOR MICHIGAN

NORTH PIER AND REVETMENT REPAIRED

MISCELLANEOUS CONCRETE AND STEEL DETAILS

SCALE: AS SHOWN
PLOT SCALE: 1 1/2" = 1'
APRIL 1999
CADD FILE NAME: PWQ11A99.DGN
DRAWING NUMBER
SHEET 11 OF 14

SOLICITATION NUMBER: DACW35-99-B-0017

$$$queue$$$ $$$$$$$$$$$$$$$$$$$$$$$$$$$$$$$$$$$$

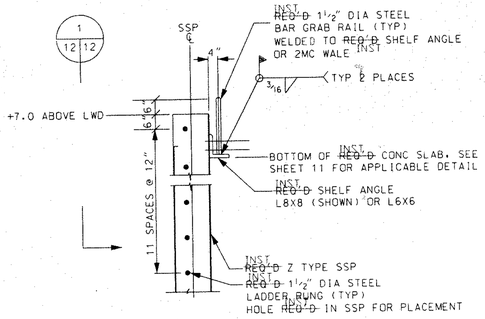

TYPE I LADDER GRAB RAIL DETAIL

SCALE: ½" = 1'-0"

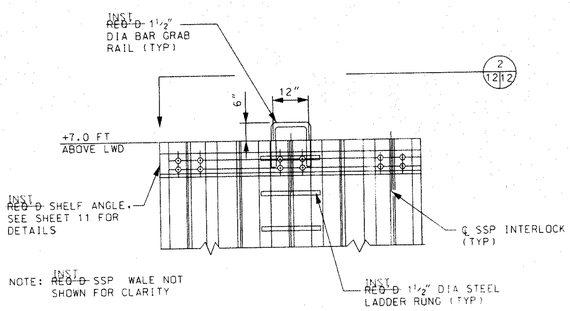

TYPE I LADDER GRAB RAIL ELEVATION 1 12|12

SCALE: ½" = 1'-0"

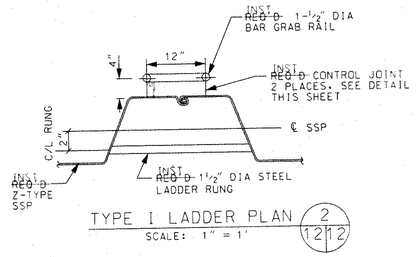

TYPE I LADDER PLAN 2 12|12

SCALE: 1" = 1'

NOTE
FOR ADDITIONAL EARTH ANCHOR INFORMATION, REFER TO SCHNABEL FOUNDATION CO. DRAWING # 98-2814

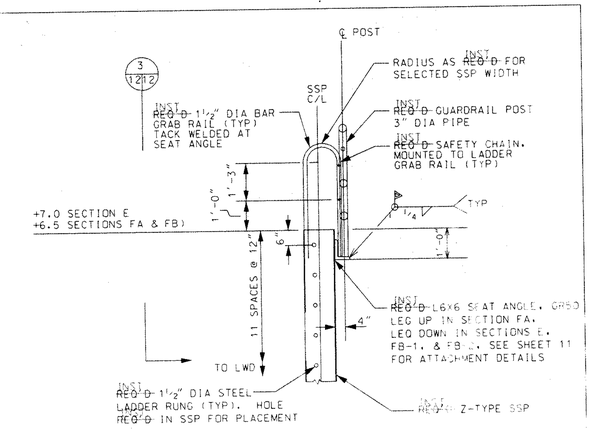

* INST REQ'D CONCRETE CAP & WALE NOT SHOWN FOR CLARITY

TYPE II LADDER AND GUARDRAIL SECTION

SCALE: ½" = 1'-0

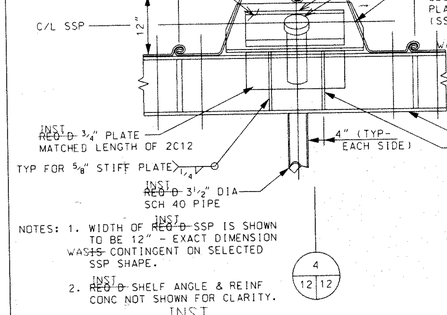

NOTES: 1. WIDTH OF INST REQ'D SSP IS SHOWN TO BE 12" - EXACT DIMENSION WAS IS CONTINGENT ON SELECTED SSP SHAPE.
2. INST REQ'D SHELF ANGLE & REINF CONC NOT SHOWN FOR CLARITY.

PLAN - INST REQ'D EARTH ANCHOR @ SSP WALL

SCALE: 1" = 1'-0"

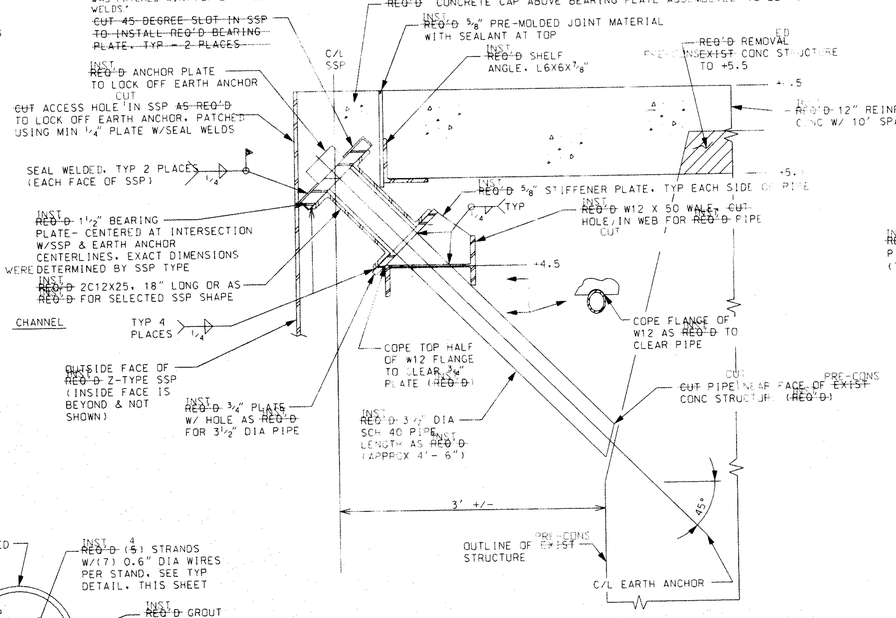

SECTION 4

SCALE 1½" = 1'-0" 12|12

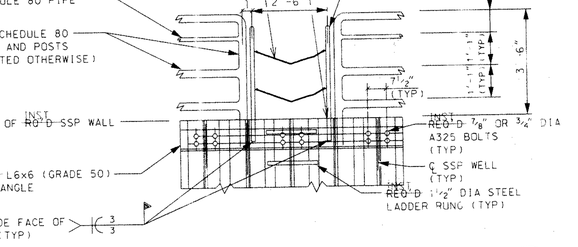

TYPE II LADDER AND GUARDRAIL ELEVATION 3 12|12

SCALE: ½" = 1'-0"

NOTE: THE CONTRACTOR SHALL INSTALL GUARDRAILS AS SHOWN IN THE CROSS SECTIONS. ALONG REVETMENT SECTIONS FA, FB-1 & FB-2, PIER SECTION E, AND ALONG THE RUBBLEMOUND WAVE ATTENUATOR, SECTION D. GUARDRAILS SHALL BE PLACED IN SECTIONS THAT DO NOT TO EXCEED 23'-0" IN LENGTH. POSTS SHALL NOT BE PLACED FARTHER APART THAN 6'. A CLEARANCE OF 9" SHALL BE FURNISHED BETWEEN SECTIONS. POST TO RAIL CONNECTIONS SHALL BE WELDED. REFER TO SPECIFICATIONS, SECTION 05552, FOR SHOP & ERECTION DRAWING REQUIREMENTS.

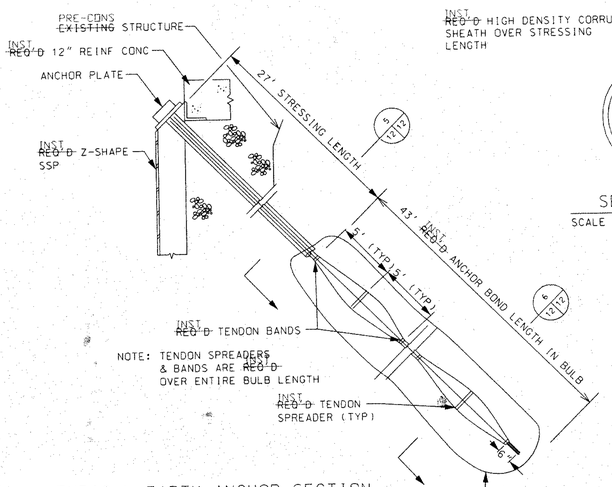

TYPICAL EARTH ANCHOR SECTION

NOT TO SCALE

NOTE: THE INST REQ'D EARTH ANCHOR SYSTEM WAS SHALL BE PROVIDED AS EQUAL TO OR EXCEED THE SYSTEM SHOWN. AND PROVIDE PULL OUT CAPACITIES AS LISTED IN SPECIFICATION SECTION 02164

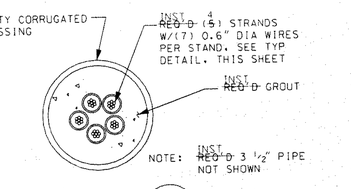

SECTION 5

SCALE 1½" = 1'-0" 12|12

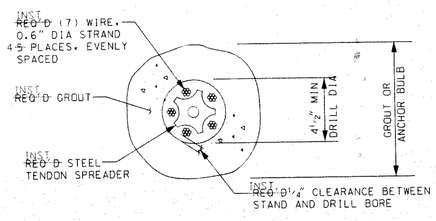

SECTION 6

NOT TO SCALE 12|12

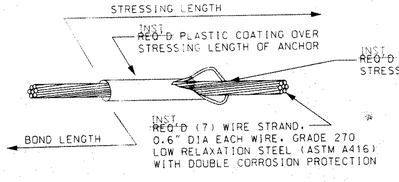

TYPICAL STRAND DETAIL

NOT TO SCALE

NO.	DATE	REVISION	BY

U.S. ARMY ENGINEER DISTRICT, DETROIT
CORPS OF ENGINEERS
DETROIT, MICHIGAN

DESIGNED BY: AW	PENTWATER HARBOR MICHIGAN
DRAWN BY: DG/ AW	NORTH PIER AND REVETMENT REPAIRED
CHECKED BY: AW	EARTH ANCHOR AND LADDER DETAILS
REVIEWED BY: P.E. CHIEF, CIVIL DESIGN SECTION	SCALE: AS SHOWN PLOT SCALE: 1"=1'-0" · APRIL 1999 · CADD FILE NAME: PW012A99.DGN · SHEET 12 OF 14 · DRAWING NUMBER

SOLICITATION NUMBER DACW35-99-B-0017

$$$$QUEUED$$$$

BORING LOG SHEET

HOLE NO. PH-1-85 | DATE: 6-7 Jan 86 | TOP ELEV.: 582.8 Ft. IGLD
COORDINATES: N / E | DRILLER: REMPALSKI | DEPTH: 85 Ft.
INSPECTOR: THOMPSON | HAMMER WT. 140 | FALL 30

Elevation	Depth Ft.	Sample No.	%	Classification USCS	Blows 1st	2nd	3rd
582.8	0.0			Black sand w/ trace silt			
579.2	3.6	1	67	Loose brown coarse to fine sand	10	5	3
576.8	6.0			L. W. D. 576.8 (0.0) Water encountered @ 6'			
574.3	8.5	2	100	Very loose brown coarse to fine sand	1/6	1/9	
		3	27	Very loose brown med. to fine sand	1	WOH	WOH
		4	33	Very loose mottled brown to black medium to fine sand	1	WOH	WOH
		5	53	Loose mottled brown to black medium to fine sand	3	2	3
557.8	25.0			Medium dense mottled brown to black med. to fine sand			
		6	67		4	4	6
		7	67		8	9	14
		8	40		4	5	9
		9	53		4	5	8
		10	60	Strong organic odor	6	7	9
532.8	50.0						
		11	40	Dense mottled brown to black medium to fine sand w/ strong organic odor	9	13	18
		12	33	Medium dense brown med. to fine sand	12	11	12
		13	33		8	9	11
		14	67	Med. dense to dense mottled brown to black medium to fine gr. sand	11	10	19
		15	67		11	14	17
507.8	75.0						
		16	67	Medium dense brown fine to medium grained sand (SP)	12	14	12
499.3	83.5	17	67	Dense mottled black to brown medium grained fine grained sand (SP)	11	15	17
497.8	85.0			BOTTOM OF BORING			

SPLIT SPOON SAMPLE | LINER SAMPLE | UT UNDISTURBED SAMPLE

BORING LOG SHEET

HOLE NO. PH-1-85 | DATE: 7-8 Jan 86 | TOP ELEV.: 582.8 Ft. IGLD
COORDINATES: N / E | DRILLER: REMPALSKI | DEPTH: 85 Ft.
INSPECTOR: THOMPSON | HAMMER WT. 140 | FALL 30

Elevation	Depth Ft.	Sample No.	%	Classification USCS	Blows 1st	2nd	3rd
582.8	0.0			Loose black sand, tr. organic			
579.3	3.5	1	53	Loose, brown, med. to fine grained sand w/ some organics	3	5	5
576.8	6.0			L W D 576.8			
		2	93	Wood pieces	2	3	3
569.3	13.5	3		Very loose brown coarse to fine sand w/ trace sub-rounded gravel, tr. wood fragments	1	1	1
		4	40	Very loose, mottled black to brown, med. to fine sand w/ strong organic odor	3	2	2
559.3	23.5	5	67	Medium dense mottled black to brown, med. to fine sand	8	12	8
557.8	25.0						
		6	53	Med. dense, mottled black to brown, med. to fine grained sand	5	6	7
		7	53		8	8	11
		8	53		8	7	11
		9	53	Medium dense, brown med. to fine sand	9	8	8
		10	67		7	7	8
532.8	50.0						
		11	67	Medium dense, brown med. to fine grained sand	7	11	12
526.8	56.0			Dark gray silt, w/ some clay			
524.8	58.0	12	93	Medium dense, brown med. to F. GR. sand w/ some pieces of wood	4	5	6
		13	67	Med. dense, brown med. to F. GR. sand	4	5	8
		14	53	Dense, brown med. to F. GR. sand	12	19	17
		15	47	Med. dense, brown med. to F. GR. sand	9	10	12
507.8	75.0						
		16	47	Medium dense, mottled gray to brown, medium to fine grained sand	8	9	9
		17	47	Medium dense, brown fine grained sand	15	14	12
497.8	85.0			BOTTOM OF BORING			

SPLIT SPOON SAMPLE | LINER SAMPLE | UT UNDISTURBED SAMPLE

BORING LOG SHEET

HOLE NO. PH-5-85 | DATE: 8-9 Jan 86 | TOP ELEV.: 582.8 Ft. IGLD
COORDINATES: N / E | DRILLER: REMPALSKI | DEPTH: 75 Ft.
INSPECTOR: THOMPSON | HAMMER WT. 140 | FALL 30

Elevation	Depth Ft.	Sample No.	%	Classification USCS	Blows 1st	2nd	3rd
582.8	0.0						
		1	67	Medium dense brown, medium to fine grained sand	10	9	10
576.8	6.0			L. W. D. water encountered at 5' depth			
574.3	8.5	2	100	Dense, brown, med. to f. gr. sand	10	18	19
569.3	13.5	3	80	Medium dense, mottled brown & black to gray, medium to fine grained sand	10	11	18
		4	53		4	5	8
		5	53		5	6	7
557.8	25.0						
		6	47	Medium dense, mottled brown to black to gray, medium to fine grained sand	5	8	7
549.3	33.5	7	67	Loose, brown, med. to fine gr. sand	2	2	6
544.3	38.5	8	80	Medium dense, gray brown, fine sand	10	9	8
		9	53	Medium dense, mottled black and gray to brown fine sand	7	18	20
		10	53		5	7	10
532.8	50.0						
529.8	53.0	11	100	Very loose, gray silty sand	2	1	3
	58.5	12	67	Medium dense, gray fine sand w/ seams of silty sand, tr. wood fragments	5	3	9
520.3	62.5	13	60	Very stiff, brown sandy clay	11	12	13
514.3	68.5	14	60	Stiff, brown sandy clay	5	7	9
510.8	72.0	15	100	Medium, brown, fine sand	9	8	11
507.8	75.0			BOTTOM OF BORING			

SPLIT SPOON SAMPLE | LINER SAMPLE | UT UNDISTURBED SAMPLE

BORING LOG SHEET

HOLE NO. PH-7-85 | DATE: 18 Sept 85 | TOP ELEV.: 580.8 Ft. IGLD
COORDINATES: N / E | DRILLER: REMPALSKI | DEPTH: 75 Ft.
INSPECTOR: THOMPSON | HAMMER WT. 140 | FALL 30

Elevation	Depth Ft.	Sample No.	%	Classification USCS	Blows 1st	2nd	3rd
580.8	0.0						
576.8				L W D			
				WATER			
564.8	16.0	1	67	Medium dense brown gravelly coarse to fine sand (SP) 1.5" max.	25	13	10
562.3	18.5	2	53	Dense, brown, fine sand w/ some gravel (SP) 1" max.	12	14	22
557.3	23.5	3	0	V. dense, brown sand (SP-SM)	13	28	35
555.8	25.0						
		4	60		18	24	33
		5	0	V. dense brown sand	25	30	40
542.3	38.5	6	87	Dense, brown, fine sand, tr. silt (SP-SM)	10	12	13
537.3	43.5	7	0	V. dense brown sand	17	28	30
532.3	48.5	8	0	Dense brown sand	15	15	18
530.8	50.0						
		9	0		11	16	22
		10	0		6	12	19
		11	0		11	19	20
		12	7	Dense, brown, fine sand	11	15	17
507.3	73.5	13	7	Med. dense brown fine sand	6	8	14
505.8	75.0			BOTTOM OF BORING			

SPLIT SPOON SAMPLE | LINER SAMPLE | UT UNDISTURBED SAMPLE

BORING LOG SHEET

HOLE NO. PH-9C-85 | DATE: 25 Sept 85 | TOP ELEV.: 580.6 Ft. IGLD
COORDINATES: N / E | DRILLER: REMPALSKI | DEPTH: 75 Ft.
INSPECTOR: THOMPSON | HAMMER WT. 140 | FALL 30

Elevation	Depth Ft.	Sample No.	%	Classification USCS	Blows 1st	2nd	3rd
580.6	0.0						
576.8	3.8			576.8 L W D (0.0)			
				WATER			
564.6	16.0			Dense brown fine sand			
557.1	23.5	1	67	Very dense, brown fine sand, tr. silt	15	42	50/5"
555.6	25.0						
		2	80		31	50/5"	
		3	80	Very dense, brown fine sand, tr. silt (SP)	15	36	50
		4	67		16	36	42
		5	80		21	32	38
532.1	48.5	6	80	Dense brown, med. to fine grained sand (SP)	20	19	26
530.6	50.0						
		7	60		13	14	18
522.1	58.5	8	60	Medium dense brown, medium to fine grained sand (SP)	12	12	16
517.1	63.5	9	67	Dense, brown med to fine sand (SP)	10	14	18
512.1	68.5	10	93	Very dense brown sand w/ trace gravel 1" max.	22	25	28
		11A / 11B	100	Sand w/ some silt	12	21	33
505.6	75.0			BOTTOM OF BORING			

SPLIT SPOON SAMPLE | LINER SAMPLE | UT UNDISTURBED SAMPLE

BORING LOG SHEET

HOLE NO. PH-9B-85 | DATE: 25 Sept 85 | TOP ELEV.: 580.6 Ft. IGLD
COORDINATES: N / E | DRILLER: REMPALSKI | DEPTH: 21 Ft.
INSPECTOR: THOMPSON | HAMMER WT. 140 | FALL 30

Elevation	Depth Ft.	Sample No.	%	Classification USCS	Blows 1st	2nd	3rd
580.6	0.0						
576.8	3.8			L W D 576.8			
				WATER			
565.6	15.0						
		1	100	Dense, brown sand w/ some gravel wood fragments	11	16	22
559.6	21.0			Boulder at 21.0' depth			
				BOTTOM OF BORING			

SPLIT SPOON SAMPLE | LINER SAMPLE | UT UNDISTURBED SAMPLE

BORING LOG SHEET

HOLE NO. PH-9A-85 | DATE: 25 Sept 85 | TOP ELEV.: 580.6 Ft. IGLD
COORDINATES: N / E | DRILLER: REMPALSKI | DEPTH: 16 Ft.
INSPECTOR: THOMPSON | HAMMER WT. 140 | FALL 30

Elevation	Depth Ft.	Sample No.	%	Classification USCS	Blows 1st	2nd	3rd
580.6	0.0						
576.8	3.8			L W D 576.8 (0.0)			
				WATER			
567.6	13.0	1	27	Dense, brown sandy gravel (GP) 1" max.	4	11	38
564.6	16.0			Boulder at 16' depth			
				BOTTOM OF BORING			

SPLIT SPOON SAMPLE | LINER SAMPLE | UT UNDISTURBED SAMPLE

NOTE: SEE SHEETS 2 AND 3 FOR SOIL BORING LOCATIONS.

$$$queue$$$

NO.	DATE	REVISION	BY

U.S. ARMY ENGINEER DISTRICT, DETROIT
CORPS OF ENGINEERS
DETROIT, MICHIGAN

DESIGNED BY: RE
DRAWN BY: DH
CHECKED BY: RE
REVIEWED BY:
P.E.
CHIEF, CIVIL DESIGN SECTION

PENTWATER HARBOR MICH
NORTH PIER AND REVETMENT REPAIRED
SOIL BORING LOGS

SCALE: AS SHOWN | APRIL 1999
CADD FILE NAME: PWB13A97.DGN
DRAWING NUMBER

SOLICITATION NUMBER DACW35-99-B-0017

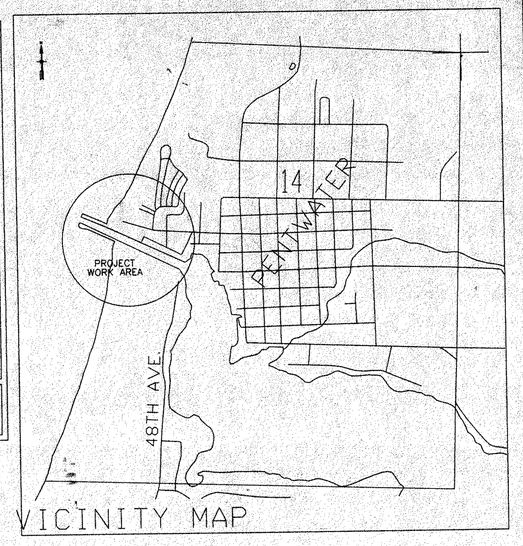

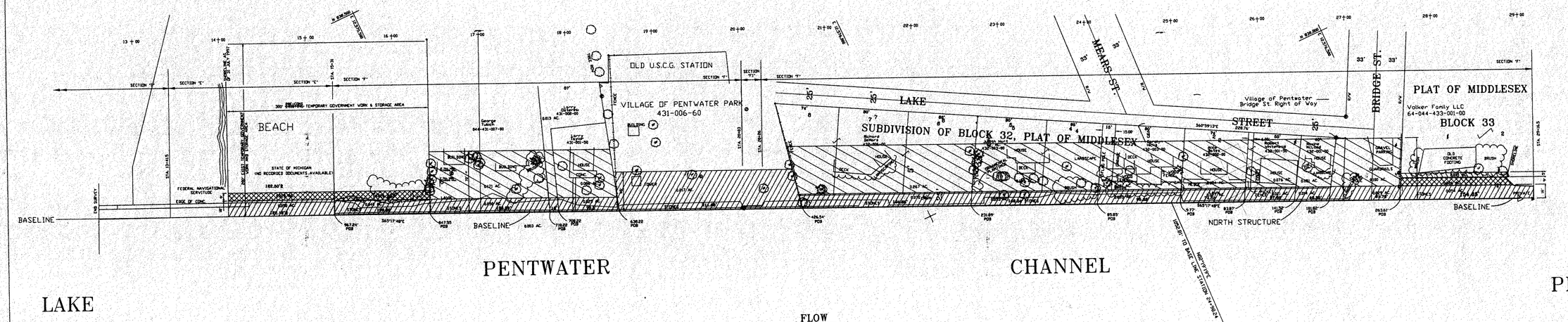

REAL ESTATE PLAN

LEGEND

PRE-CONS
- EXISTING GOVERNMENT REAL ESTATE PROPERTY AND/OR NAVIGATIONAL SERVITUDE LIMITS
- PERMANENT CHANNEL IMPROVEMENT EASEMENT
- PERMANENT EARTH ANCHOR (SUBSURFACE) EASEMENT
- TEMPORARY WORK EASEMENT
- IRON FOUND
- IRON SET
- P.K. NAIL FOUND
- P.K. NAIL SET
- GPS MONUMENT
- MONUMENT BOX FOUND
- MONUMENT FOUND
- MONUMENT SET
- (R) RECORD
- (M) MEASURED

DATE	REVISION	BY

U.S. ARMY ENGINEER DISTRICT, DETROIT
CORPS OF ENGINEERS
DETROIT, MICHIGAN

DESIGNED BY: AW	PENTWATER HARBOR, MICHIGAN
DRAWN BY: DLH/AW	NORTH PIER AND REVETMENT REPAIRSED
CHECKED BY: DW	REAL ESTATE EASEMENTS
REVIEWED BY: CHIEF, TECHNICAL SUPPORT SECTION	SCALE: 1"= 50' · APRIL 1999 · CADD FILE: PWY14A99.DGN · SHEET 14 OF 14 · DRAWING NUMBER

SOLICITATION NO. DACW35-99-B-0017